Journal of CO_2 Utilization 27 (2018) 366–373

Contents lists available at ScienceDirect

Journal of CO_2 Utilization

journal homepage: www.elsevier.com/locate/jcou

Zein/diclofenac sodium coprecipitation at micrometric and nanometric range by supercritical antisolvent processing

Paola Franco, Ernesto Reverchon, Iolanda De Marco*

Department of Industrial Engineering, University of Salerno, Via Giovanni Paolo II, 132, 84084, Fisciano, SA, Italy

ARTICLE INFO

Keywords:
Supercritical antisolvent coprecipitation
Drug release
Microparticles
Nanoparticles
Zein
SAS characteristic times

ABSTRACT

In this work, the supercritical antisolvent (SAS) process is proposed to coprecipitate zein with diclofenac sodium (a model drug). In the first part of this paper, the proper conditions, in terms of pressure, temperature and concentration, for the attainment of zein microparticles, were detected. At 90 bar, 40 °C and 50 mg/mL, microparticles with a mean diameter of 4.19 μm were obtained. The coprecipitation with diclofenac sodium at different polymer/drug ratio and concentration in the liquid solution was successfully performed and, with the support of the drug release analyses, the coprecipitation mechanisms (both in the case of microparticles and nanoparticles formation) were postulated.

1. Introduction

Coprecipitation is largely employed in the pharmaceutical and nutraceutical fields with several aims: protecting the active material against oxidation and deactivation, enhancing the bioavailability of poorly water soluble drugs using a hydrophilic polymer, masking the organoleptic properties (color, taste, and odor) of the core material, and achieving the controlled delivery of active compounds [1,2].

Many traditional micronization techniques can be used to produce coprecipitates: spray-drying [3], emulsification/solvent evaporation [4], centrifugal extrusion [5], jet-milling [6], freeze drying [7], and coacervation [8]. However, these processes suffer from some drawbacks, such as the production of particles with a wide particle size distribution (PSD), the possible degradation of the product due to mechanical or thermal stresses, and difficulties in the total elimination of the organic solvents used in the process [9].

Supercritical fluids (SCFs) based processes can overcome these limitations, as they show liquid-like properties, mainly high solvent power and density, and gas-like transport properties. Carbon dioxide (CO_2) is the most commonly used supercritical fluid because it is non-toxic, cheap and has accessible critical parameters (T_C = 31.1 °C, P_C = 73.8 bar). The application of SCFs as alternative to traditional processes was successful in various applications, such as the micronization of different kind of materials [10,11], the extraction of natural matter [12,13], the impregnation of active substances in aerogels [14,15], and scaffolds production [16]. Supercritical AntiSolvent (SAS) precipitation is one of the most successful supercritical assisted micronization techniques. It was used to obtain nanoparticles and microparticles of several kinds of compounds, such as pharmaceuticals, coloring matters, polymers and biopolymers [17,18]. Its application provides many advantages, mainly the possibility of controlling particle size and morphology and eliminating the solvent residue without post-processing of the powders. In this study, the classification of powders as nanoparticles for mean diameters lower than 0.2 μm, sub-microparticles for mean diameters ranging from 0.2 and 0.4 μm and microparticles for mean diameters larger than 0.4 μm is proposed.

Some papers were targeted on SAS mechanisms, considering the involved aspects related to fluid-dynamics [19], thermodynamics [20] and mass transfer [21,22]. It was demonstrated that the competition of two characteristic times governs the switch between nanoparticles and microparticles formation [23–25]: the time of jet break-up (t_{JB}) and the time of surface tension vanishing (t_{stv}). If t_{JB} is the controlling time of the process, droplets are formed by the breaking of the liquid jet, then they are dried by supercritical CO_2 (SC-CO_2) and microparticles are produced; if t_{stv} is the controlling time, the liquid jet disappears before jet break-up and nanoparticles are obtained by a gas-to-particle formation mechanism [23,24].

Coprecipitation by SAS was successfully applied only in some works [26–32] and only a few polymers were successfully processed for this scope; namely polyvinylpyrrolidone (PVP) and poly(L-lactic acid) PLLA [33]. Indeed, SAS coprecipitation involves the formation of a quaternary system: solvent + polymer + active compound + SC-CO_2 that frequently shows complex phase behaviors with a subsequent unsuccessful coprecipitation [33]. Prosapio et al. [30,31] showed that it is

* Corresponding author.
E-mail address: idemarco@unisa.it (I. De Marco).

https://doi.org/10.1016/j.jcou.2018.08.015
Received 6 June 2018; Received in revised form 24 July 2018; Accepted 17 August 2018

possible to increase the drug dissolution rate using PVP as the carrier for drug delivery systems. Taki et al. [32] produced herbicide loaded microparticles of L-polylactic acid, showing that SAS coprecipitation is a promising way to obtain a controlled herbicide delivery system. Kalogiannis et al. [17] tried to coprecipitate amoxicillin with PLLA using different mixtures of dichloromethane (DCM) and dimethylsulfoxide (DMSO); in the range 100–200 bar and 40–50 °C, they indicated an improvement of the loading percentages and efficiencies, increasing the DMSO/DCM volumetric ratio.

Zein is a major storage protein in corn endosperm [34] classified as *Generally Recognized as Safe* (GRAS) by the *US Food and Drug Administration* [35]. It was proposed for various applications, such as biomedical, especially tissue engineering [36], and food packaging [37–39], due to its low water vapor permeability and antibacterial activity. Zein was also proposed as carrier for drug delivery systems thanks to its good biocompatibility and low toxicity, in addition to its hydrophobicity and solubility in solvents such as ethanol, acetone and dimethylsulphoxide [40].

Zhong et al. [41] reported SAS experiments on zein using ethanol-water (water 10% v/v) mixtures and methanol as the organic solvents. In the first case, they obtained very large imploded microparticles; in the second case, they produced nanoparticles. In a subsequent work, Zhong et al. [42] used zein as a carrier to try to coprecipitate lysozyme by SAS using 90% ethanol in water as the liquid solvent. The presence of 10% w/w water at the adopted SAS conditions does not allow complete miscibility between the liquid mixture and SC-CO_2; therefore, conditions for a fully successful SAS were not obtained, and irregular particles, with a porous internal structure, were produced. Particle size distributions were not reported; nevertheless, the authors indicated an improvement of the drug sustained release. Liu et al. [43] tried to apply SAS process to incorporate 10-hydroxycamptothecin (HCPT) in zein microspheres, but coprecipitation failed. The proposed SEM images of the particles obtained by SAS showed that crystals of HCPT and zein precipitated separately.

Summarizing the previous discussion, it is clear that SAS coprecipitation is still relatively unexplored and only a reduced number of polymers has been successfully used. Some previous attempts to use zein in SAS coprecipitation were substantially unsuccessful, but zein alone seems to be processable [41].

Therefore, the scope of this work is to study in detail zein morphologies obtainable using SAS and, then, to study diclofenac sodium (DICLO) coprecipitation using zein as carrier. DICLO is a non-steroidal anti-inflammatory drug (NSAID) [44], used as model compound. An interpretation of the coprecipitation mechanisms in correspondence of different morphologies is postulated, using the support of drug release experiments.

2. Materials, methods and procedures

2.1. Materials

Zein (CAS Number: 9010-66-6, water content < 8%), Diclofenac sodium salt (DICLO, average molecular weight 318.13 g/mol) and Dimethylsulfoxide (DMSO, purity 99.5%) were purchased from Sigma-Aldrich (Italy). CO_2 (purity 99%) was supplied by Morlando Group s.r.l. (Italy). All materials were used as received. The maximum solubility of zein in DMSO is about to 60 mg/mL, at room temperature.

2.2. SAS apparatus and procedure

SAS laboratory plant used for the experiments discussed in this work (sketched in Fig. 1) consists of two high-pressure pumps to feed carbon dioxide (S1) and liquid solution (S2), respectively. The precipitation chamber (PC) is cylindrical and has an internal volume equal to 500 cm^3. A proportional integral derivative (PID) controller, connected with electrically thin bands, assures the control of the temperature

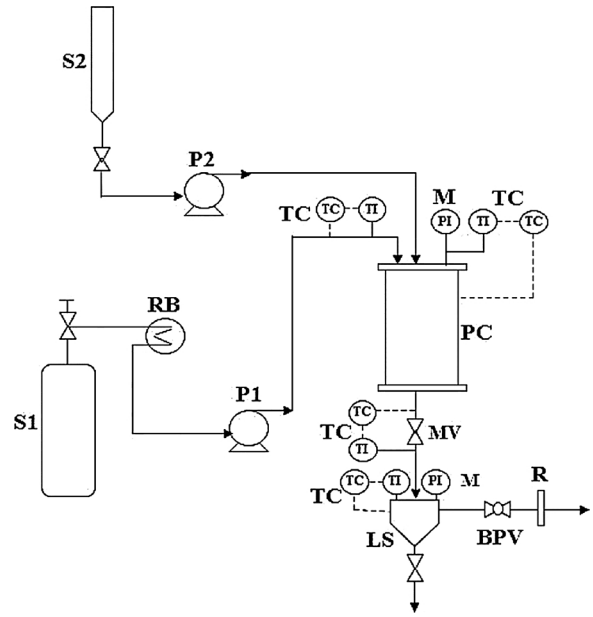

Fig. 1. Schematic representation of SAS apparatus. S1: CO_2 supply; S2: liquid solution supply; RB: refrigerating bath; P1, P2: pumps; TC: thermocouple; M: manometer; PC: precipitation chamber; MV: micrometering valve; LS: liquid separator; BPV: back pressure valve; R: rotameter.

inside the vessel, whereas the pressure is measured through a test gauge manometer and regulated by a micrometering valve. The liquid solution is injected in the vessel through a thin wall stainless steel nozzle (i.d. = 100 μm). Supercritical CO_2, is preheated and co-currently delivered through another port to the chamber. A stainless steel filter with a pore diameter of 0.1 μm, located at the bottom of the precipitator, is used to collect the produced powder and allows the CO_2–solvent solution to pass through. The liquid solvent is recovered in a collection vessel located downstream the precipitator, whose pressure is regulated by a backpressure valve at about 18–20 bar. At the exit of the second vessel, a rotameter and a dry test meter, respectively measure the CO_2 flow rate and the total quantity of delivered antisolvent.

A SAS experiment starts pressurizing the precipitation vessel with CO_2 until the desired pressure is reached; then, the micrometering valve is opened to stabilize the CO_2 flow. Pressure, temperature, and CO_2 flow rate are kept constant during the experiment. When the achieved operating conditions are stable, the liquid-solution is delivered at constant flow rate into the precipitator. At the end of solution injection, the liquid flow rate is stopped, whereas SC-CO_2 continues to flow, with the aim of eliminating the residual content of liquid solubilized in the supercritical antisolvent. When the washing step is completed, CO_2 flow is stopped, the precipitator is depressurized down to atmospheric pressure and the precipitated powder can be collected and analyzed.

2.3. Analytical methods

The size and the morphology of the precipitated material, after a coating with conductive material (gold-palladium), were observed by a Field Emission Scanning Electron Microscope (FESEM, mod. LEO 1525, Carl Zeiss SMT AG, Oberkochen, Germany). The average particle size and the particle size distribution (PSD) of the precipitated powders were estimated on the basis of FESEM photomicrographs with the help of an image analysis software (Sigma Scan Pro, Aspire Software International Ashburn, VA, USA). For each PSD, different FESEM images, taken at high enlargements and related to particles sampled in different points of the precipitator, were used. The calculations and the histograms related to the PSDs were made using the program Microcal Origin 8.0 (Microcal Software Inc., Northampton, MA, USA).