Ecological Engineering 90 (2016) 498–509

Contents lists available at ScienceDirect

Ecological Engineering

journal homepage: www.elsevier.com/locate/ecoleng

Residual life and degradation assessment of wood elements used in soil bioengineering structures for slope protection

N. Romano[a,*], G.P. Lignola[b], M. Brigante[b], L. Bosso[c], G.B. Chirico[a]

[a] Department of Agricultural Sciences, Division of Agricultural, Forest and Biosystems Engineering, University of Napoli Federico II, Portici (Napoli), Italy
[b] Department of Structures for Engineering and Architecture, University of Napoli Federico II, Napoli, Italy
[c] Department of Agricultural Sciences, Division of Biology and Protection of Agricultural and Forest Systems, University of Napoli Federico II, Portici (Napoli), Italy

ARTICLE INFO

Article history:
Received 30 July 2015
Received in revised form
30 December 2015
Accepted 26 January 2016
Available online 9 March 2016

Keywords:
Soil bioengineering
Slope protection
Erosion control
Wood
Mechanical properties
Nondestructive testing
Residual life
Degradation

ABSTRACT

Soil bioengineering techniques to repair slope failures and increase slope stability are often used, when possible, as alternatives to traditional structures in order to mitigate environmental impact without compromising effectiveness. However, such techniques use live plants and entrust most of their structural resistance to wood members whose mechanical characteristics diminish with time. To date, the decay of mechanical characteristics of wood elements employed in soil bioengineering techniques and lifetime predictions has been little explored. Such information is also important for durability forecasting. In this paper we present the results of experimental analyses carried out to evaluate the degradation of mechanical properties of untreated timber elements which were collected from single and double live cribwalls or check-dams built about ten years ago in the Vesuvius National Park (Naples, Southern Italy). To help interpret the behavior of a complex material such as wood, a novelty of this study lies not only in combining ultrasonic and sclerometric nondestructive testing (NDT) methods so as to reduce measurement errors, but also in framing the outcomes from mechanical tests within the biological analysis of fungi detected on the timbers. Exploratory statistical analyses reveal that there exist hardly any correlations between moisture contents in the timber elements and both transversal and longitudinal ultrasonic velocities, although some clustering provides insights into the results obtained. Comparisons between results using data measured on "old" and "new" timber elements enable some evaluations of residual safety factor assessment to be carried out.

© 2016 Elsevier B.V. All rights reserved.

1. Introduction

Soil bioengineering methods are increasingly applied for slope protection, stabilization of shallow rapid landslides, erosion control, stream-bank problems, and riparian restoration (USDA, 1995; Stokes et al., 2008). To mimic nature, the basic structural components of most soil bioengineering structures are living plants in combination with wood elements arranged in different ways. Typical examples are wattle fences to establish terraces in oversteepened slopes or timber crib retaining walls (live cribwalls, for short) whose inert structural parts are untreated log or timber elements. The functionality of the system, i.e. living plants plus inert parts, relies not only on the mechanical properties of the individual elements, but also on the entire structural behavior originating from the lattice-like assembly and stacking arrangements of the various structural members. In this paper, we basically deal with the former problem, even though we also elucidate on the latter aspect regarding the effects exerted by the decay of the element mechanical characteristics on the overall structural behavior.

Soil bioengineering works are generally designed under the assumption that the growth of plant roots, within and outside the inert wooden structure, gradually provides additional strength to the whole structure, hence in some way compensating the reduction in the mechanical characteristics of the decaying wooden elements (USDA, 2010). Therefore, from a practical perspective, the design of a soil bioengineering structure can undoubtedly benefit from scientific studies aiming to assess, under different environmental conditions, the time-scales of the decay on wood strength to be compared with the time-scales of plant root development.

As all civil engineering structures, soil bioengineering systems are preliminarily designed taking allowable stresses and design

* Corresponding author at: Department of Agricultural Sciences, Division of Agricultural, Forest and Biosystems Engineering, University of Napoli Federico II, Via Università, n. 100, 80055 Portici (Napoli), Italy. Tel.: +39 081 2539421; fax: +39 081 2539412.
E-mail address: nunzio.romano@unina.it (N. Romano).

http://dx.doi.org/10.1016/j.ecoleng.2016.01.085
0925-8574/© 2016 Elsevier B.V. All rights reserved.

loads into account. The assigned safety factors have to be satisfied for specified problems with predefined dimensions and physical/mechanical properties of the individual structural components. Although in general timber possesses a number of macroscopic defects, such as cracks and knots, the strength characteristics and load-carrying capacity of structures made of timber elements diminish with time as the material matrix deteriorates (van de Kuilen, 2007). This deterioration can gather pace or be fairly slow depending mainly on the wood species, e.g. hardwood or softwood, but it is also affected by the degree of stress, the orientation of the applied load relative to the wood fibers, the loading history, the level of exposure to unfavorable environmental factors, and pathogens.

Wood is colonized and degraded by a variety of organisms, not only plants. Bacteria, insects, and fungi are some of the major organisms that can attack it and affect its properties even significantly. The biological component can cause damage especially in combination with physical and chemical processes, thereby feeding the proliferation of organisms (Schwarze, 2007). Fungi are the prime biological cause of wood degradation, especially those belonging to the "wood-decay" group of Ascomycetes and Basidiomycetes (Nordén and Paltto, 2001). These fungi produce lignocellulose enzymes that absorb the soluble compounds from de-polymerization through the fungal hyphae, thus causing deterioration of the mechanical properties of wood (Zabel and Morrell, 1992). On the basis of physical and chemical changes produced in wood and the resulting alterations in color and appearance of decaying wood, wood-decay fungi are classified as brown rots, white rots, or soft rots. In these three classes, all organisms are present which usually attack the wooden structures and can cause major damage.

Wildfire is also a cause of great concern. Although fire-retardant treatments can be used, surveying is required in a post-fire situation to evaluate the residual degree of safety. For a pre-fixed functional structure lifetime, the timber elements should be designed to account not only for permanent loads, but also for expected mechanical decay (Bodig and Goodman, 1973).

The problem of loss of serviceability of soil bioengineering structures is therefore a matter of prime importance for local authorities, public agencies, and stakeholders responsible for managing and protecting land resources. Assessment of material characteristics and estimation of residual life represent invaluable information for guiding reliability-based pole inspections and setting up cost-effective plans for the maintenance and repair of existing soil bioengineering structures. Replacement will be necessary when the residual strength of the element has reached an unacceptable threshold.

Wood is a complex natural material, with non-homogeneous anatomic features (basically made by cells, vessel elements, fibers, tracheids, pits and tylosis) and anisotropic properties whose identification depends on the specific scale of the phenomenon under study (Faherty and Williamson, 1997). In general, wood is relatively stiff and has a very good strength if stressed in the direction parallel to the fibers and the elongated cells. It is stronger in tension than compression due to longitudinal compressive buckling of the fibers; instead, it is flexible and weaker perpendicular to the fibers.

Since time immemorial wood has been used as a material to withstand predominantly uni-axial stresses in the direction of the fibers while incorporating suitable connections to transfer the loads appropriately to other parts of the structure. A large body of literature exists about the mechanical properties of wood as an engineered material and how to build wooden structures. However, even though any structure has to comply with specific regulations and technical codes, there are some construction practices that make use of timber elements and are still mostly learned by experience and skill. Soil bioengineering structures can undoubtedly be included in the latter group.

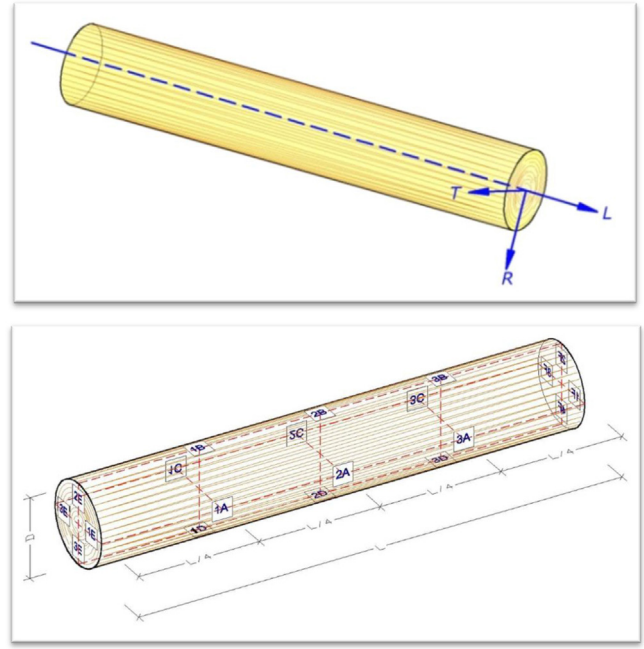

Fig. 1. Schematic of the tested wood pole. (1-top), indication of the orientation of the structural element in respect to the longitudinal (*L*), radial (*R*), and tangential (*T*) directions; (1-bottom), locations of the monitoring points used for the non-destructive testing methods.

1.1. Research significance

In this paper we present a summary of laboratory investigations carried out on untreated chestnut timbers that were elements of live cribwalls designed to stabilize the hillslopes of some paths in the Vesuvius National Park (Naples, Southern Italy) (Bifulco et al., 2001). The main aim of this contribution is to discuss the following issues: (*i*) the use of practicable and cost-effective testing procedures for assessing the residual lifetime of timber elements used in soil bioengineering structures; (*ii*) the search for relationships between wood mechanical properties and their decay due to some agents such as moisture content and fungi; (*iii*) the development of basic guidelines for the design of elements of soil bioengineering systems that are wooden structures specifically exposed to the potentially negative effects of climatic seasonality or the impact of even severe weather conditions.

2. Methods and experimental work

As pointed out by some researchers (Perkins, 1967; Bodig and Goodman, 1973), two main approaches to modeling wood deformation can be followed. One is based on an orthotropic formulation of continuum mechanics and wood is viewed as a homogeneous continuum, disregarding the complexity of wood micro-structure. By contrast, the second approach directly involves characterization of wood micro-structure using isotropic elements. For practical reasons and to provide end-users, consultants, and practitioners with some useful guidelines, only the continuum mechanics approach will be considered here.

Following a macroscopic approach, the mechanical behavior (effective response) of a wooden log or pole can be modeled by assuming that this element is a cylindrical orthotropic material characterized by three mutually perpendicular planes of symmetry, with unique and independent mechanical properties along these three perpendicular directions: longitudinal (*L*), radial (*R*), and tangential (*T*) (see the schematic of the pole in Fig. 1-top). The

Download English Version:

https://daneshyari.com/en/article/4388700

Download Persian Version:

https://daneshyari.com/article/4388700

Daneshyari.com