ARTICLE IN PRESS

Control Engineering Practice ∎ (∎∎∎∎) ∎∎∎–∎∎∎

Contents lists available at ScienceDirect

Control Engineering Practice

journal homepage: www.elsevier.com/locate/conengprac

Multivariable friction compensation control for a variable stiffness actuator

Berno J.E. Misgeld [a,*], Matthias Kramer [b], Steffen Leonhardt [a]

[a] Philips Chair for Medical Information Technology, RWTH Aachen University, Aachen, Germany
[b] MSG Maschinenbau GmbH, Schmallenberg, Germany

ARTICLE INFO

Article history:
Received 30 March 2015
Received in revised form
25 August 2015
Accepted 26 August 2015

Keywords:
Friction compensation
Medical technology
Multivariable control
Compliant actuators
Variable mechanical impedance

ABSTRACT

A novel decentralised friction compensation control approach for a specific electro-pneumatic adjustable impedance actuator (EPAIA) is presented in this paper. EPAIA employs a rotary pneumatic actuator to provide an adjustable compliant element in series to the gear train. The compliant element is thereby inserted between a brushless direct current motor, a gear reduction and the load. The decentralised control system consists of two control-loops and a decoupler. In a first control-loop, the interaction torque between actuator and load is controlled with a cascaded/post-compensator architecture involving a norm-optimal strictly positive-real $\mathcal{H}_2$-controller to minimise the actuator output impedance. In a second control-loop, a stiffness controller continuously adjusts the pressure of the pneumatic chambers to realise a certain interaction stiffness. Since first hardware validation tests identified the occurrence of nonlinear friction effects that worsened the control performance, the control strategy has been extended with a new adaptive friction compensation scheme. This approach is based on the two-state dynamic friction model with elasto-plasticity (2SEP) for which an Extended Kalman Filter (EKF) friction observer has been developed and incorporated to the decentralised control strategy. The resulting overall controller has been validated in nonlinear simulations and in a test bench under variable load conditions.
© 2015 Elsevier Ltd. All rights reserved.

1. Introduction

A recently conducted study of the National Science Foundation (NSF, USA) in cooperation with the World Technology Evaluation Center (WTEC, USA) identifies eight major trends in mobile technologies (Reinkensmeyer et al., 2012). One of these identified trends concerns the development of assistive technologies, designed specifically for the interaction with a human to support or enhance human motor abilities. Compared to the fundamental advances in mobile sensor technology, progress in new actuator technologies is still lacking but nevertheless of crucial importance. The study comes to the conclusion that more powerful, lighter and more efficient actuators are needed and should furthermore be able to provide a patient-cooperative support. The key concept that contributes to a patient-cooperative movement support is the modulation of actuator mechanical output impedance. Mechanical impedance can be defined as the frequency-dependent resistance of some mechanical system or structure to sinusoidal motion. If freely adjustable or even real-time controllable, such a changeable mechanical output impedance would be a highly desired property in modern biomimetic and rehabilitative robotics. The mechanical impedance could then be adapted according to remaining motor function of the patient (according to patient's impedance). It is important to note that an adaptable mechanical impedance is also observed in human or animal locomotion, which often has to adapt to an uncertain environment with unpredictable disturbances. An adaptable mechanical impedance is achieved via agonist/antagonist muscle co-activation and the nonlinear spring-like behaviour of the human sinews that connect the muscle to the joint. The human locomotion system is able to absorb shocks or provide explosive movement by using energy storage and release and was investigated for these properties since the early 1980s (Hogan, 1984).

First compliant actuator designs considered simple linear springs to decouple the actuator from the load and were applied to otherwise stiff electric or hydraulic applications (Pratt & Williamson, 1995; Pratt et al., 1995). The devices were called series elastic actuators (SEA), but comprised an actuator bandwidth limitation determined by the stiffness value of the spring as a main disadvantage. Therefore, and as the next natural step, variable stiffness actuators (VSA) were introduced, which represent a generalisation of SEA (van Ham, Sugar, Vanderborght, Hollander, & Lefeber, 2009). VSA are able to adapt the spring stiffness (offline or online) and can therefore overcome the previous limitation.

* Corresponding author. Fax: +49 241623211.
E-mail address: misgeld@hia.rwth-aachen.de (B.J.E. Misgeld).

http://dx.doi.org/10.1016/j.conengprac.2015.08.013
0967-0661/© 2015 Elsevier Ltd. All rights reserved.

Please cite this article as: Misgeld, B. J. E., et al. Multivariable friction compensation control for a variable stiffness actuator. *Control Engineering Practice* (2015), http://dx.doi.org/10.1016/j.conengprac.2015.08.013

Recently, variable impedance actuators (VIA) were introduced as a relatively new field of research (Vanderborght et al., 2013). A modulation of actuator output impedance constitutes a variable viscous damping and a variable stiffness located between actuator and load. This is desirable for a number of reasons. An actuator-inherent compliance in VSA and VIA is physically realised. The concept therefore contributes towards safety strategies, compared to virtual stiffness control, where a stiff actuator is made compliant by feedback control. In VIA, the spring allows for energy storage in cyclic motions and a variable damper can contribute to shock absorption in sudden environmental contact situations (Zinn, Khatib, Roth, & Salisbury, 2003).

The majority of VSA are based on a mechanical element (van Ham et al., 2009). Disadvantages associated with most of these devices are the additional weight, mechanical complexity, friction or dynamic process coupling effects of the adjustable compliant elements. In order to alleviate some of these disadvantages, we have designed the new electro-pneumatic adaptable impedance actuator (EPAIA). EPAIA can be classified as a VSA, since it employs a changeable pneumatic spring stiffness (Misgeld, Stille, Pomprapa, & Leonhardt, 2014b). The spring stiffness is continuously controlled by adjusting the chamber pressures of the rotary pneumatic actuators and thus similar to changing the operating point of a nonlinear spring by changing its pre-tension. Changing the stiffness online is easily possible. Furthermore, by deriving a detailed process model of mechanical–pneumatic interaction, a decoupler can be designed that is based on the underlying physical equations. As a disadvantage, nonlinear stiction-friction occurs in the rotary pneumatic actuator that degrades the performance of the torque control-loop (Misgeld, Stille, & Leonhardt, 2014a). The control strategy of EPAIA is therefore extended with a detailed electro-mechanic-pneumatic model and subsequently a friction observer-based compensation strategy is introduced. The rotary pneumatic actuator can be seen as a pneumatic series elastic element (PSEE). The rotary pneumatic actuator will be denoted PSEE from hereafter.

This paper is organised as follows. In Section 2, the mechanical design of the second version of EPAIA is presented, followed by a detailed mechanical model including nonlinear dynamic friction in Section 3. The decentralised control strategy is detailed in Section 4 and extended with a novel friction observer. Simulation and experimental results are given in Section 5. Finally, we conclude with a discussion and point out directions for future research.

2. Mechanical design

EPAIA is currently in its second design stage and depicted with sectional view in Fig. 1. A 150 W brushless direct-current (BLDC) motor (EC 45, Maxon Motor AG, Sachseln, Switzerland) and a pneumatic rotary actuator (M/60284/TI, Norgren GmbH, Alpen, Germany) comprise its main components. The BLDC motor is connected to the pneumatic rotary actuator via a rigid shaft coupling and includes a two-stage planetary gear gearbox (GP 52, Maxon Motor AG, Sachseln, Switzerland) and an incremental encoder unit (HEDL 9140, Maxon Motor AG, Sachseln, Switzerland). Spirally coiled pneumatic supply tubes are contained in a tube housing to allow for a relative rotational displacement by coiling and uncoiling motion. Two spirally shaped tubes of different diameters were hereby guided by the aluminium housing, for minimising pre-tension of the tubes and in order to provide a space-saving integration. To measure the rotational displacement angle over the pneumatic rotary actuator, a second incremental encoder (AEAT-9000-1GSH1 including code-wheel HEDG-9000-H13, Avago Technologies, San Jose, USA) is placed at the output of the pneumatic rotary actuator and inside the tube housing. Furthermore, an output bevel gear reduction made from hardened steel (40 15 1400, Atlanta, Bietigheim-Bissingen, Germany) is used for transmission of the torque to the joint output shaft. The current version of EPAIA is extended with a positioning aid (marked by a circle in Fig. 1) to minimise backlash and friction of the output bevel gear. EPAIA is designed to provide sufficient motion support for the lower extremities of a motion impaired person. According to Kong, Bae, and Tomizuka (2012), the maximum average power in normal walking can be specified as 70–80 W for a healthy adult, weighing 70 kg. Hence, the BLDC motor was chosen to provide a nominal electric power of 150 W, considering a safety factor of 2. Joint trajectories corresponding to this value comprise a maximum angular velocity of $|\omega_{knee}| \leq 60$ rpm and a maximum torque of $|\tau_{knee}| \leq 40$ Nm. With a nominal torque of 0.174 Nm and a maximum stall torque of 1.656 Nm, the actuator is able to guarantee 20 Nm continuous output torque and about times 3.8 more over a short period of time. This is due to the two-stage planetary gear reduction and the bevel gear reduction with ratios of 1:26 and 1:4, respectively. With a nominal speed of 9000 rpm the actuator is able to provide about 87 rpm at the load output. The PSEE is able to provide a supportive torque of 9.5 Nm at 6 bar chamber pressure (38 Nm when reflected through an ideal bevel gear). It should be noted that the rotary pneumatic actuator can be operated at higher operating pressures. Additional reasons for the bevel gear transmission ratio of 1:4 are the deflection angle range over the PSEE and the desired stiffness range of the actuator at the joint. On one hand, a knee angle range of about 90°. leads to a PSEE deflection angle range of 360°, which can be realised by the use of the coiled pneumatic tubes. On the other hand, it was shown (Misgeld et al., 2014a) that operating pressures of 1–7 bar leads to respective stiffness ranges of 5–32.5 Nm/rad. Thus, employing the bevel gear with reduction ratio of 1:4, gear box reflected stiffness values are achieved that are typical for normal walking (Shamaei, Sawicki, & Dollar, 2013).

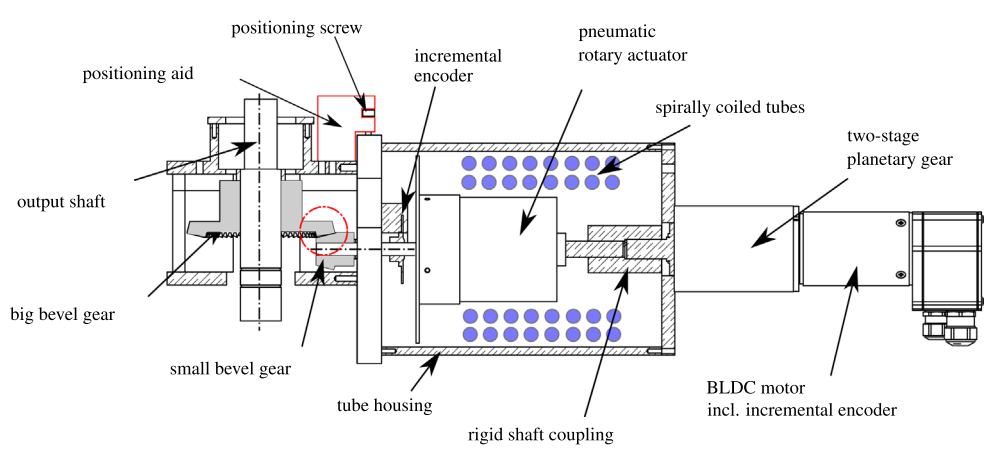

Fig. 1. Sectional view of the new EPAIA design (BLDC – brushless direct current).

Please cite this article as: Misgeld, B. J. E., et al. Multivariable friction compensation control for a variable stiffness actuator. *Control Engineering Practice* (2015), http://dx.doi.org/10.1016/j.conengprac.2015.08.013

Download English Version:

https://daneshyari.com/en/article/5000475

Download Persian Version:

https://daneshyari.com/article/5000475

Daneshyari.com