Journal of Energy Storage 13 (2017) 409–417

Contents lists available at ScienceDirect

Journal of Energy Storage

journal homepage: www.elsevier.com/locate/est

Determination of operating parameters for PEM fuel cell using support vector machines approach

Xiongbin Peng[a], Weiqiang Wu[b], Yakun Zhang[b], Wei Yang[b,*]

[a] Department of Mechatronics Engineering, Shantou University, Shantou 515063, China
[b] Department of Mechanical Engineering, Zhejiang University, Hangzhou 310027, China

ARTICLE INFO

Article history:
Received 16 August 2017
Received in revised form 6 September 2017
Accepted 6 September 2017
Available online 9 October 2017

Keywords:
Polymer electrolyte membrane fuel cell
Uncertainty modelling
Support vector machine
Simulation design
Optimization

ABSTRACT

Polymer electrolyte membrane fuel cells (PEMFCs) are considered as an alternative source of power generation due to its high efficiency and environmental harmlessness. Studies were conducted to find out the relation between power density and operating parameters, such as operating temperature, fuel cell pressure, the relative humidity of anode, the relative humidity of cathode, porosity of gas diffusion electrode (GDE), conductivity of GDE. However, less focus was paid on determining the operating conditions which will maximize the power density of PEMFCs. The present work proposes the optimal design of a power density model for PEMFCs based on the artificial intelligence approach of support vector machine (SVM). The formulated power density model is in good agreement with the experimental data. Simulation profiler is then generated to verify its insensitivity to the variations in the operating conditions and the inferences on relationships between power density and operating parameters are investigated. The results show that the fuel cell pressure and conductivity of GDE are the two most dominant inputs in effective functioning of PEMFC. Optimization of the formulated model reveals that the operating temperature of 86.2 K, the fuel cell pressure of 3.44 atm, the relative humidity of anode of 50%, the relative humidity of cathode of 64.4%, the porosity of GED of 0.5 and the conductivity of GDE of 997.7 s/m gives the maximum power density value of 870 mW/cm^2 of PEMFC.

© 2017 Elsevier Ltd. All rights reserved.

1. Introduction

Fuel cells are now widely used in power generation field, due to their high efficiency and environmental harmlessness [1,2]. They can directly transform the chemical fuel cell energy into electricity within a cleaner, more efficient and flexible electrochemical reaction. The most important component in a fuel cell is the unit cell, which contains an electrolyte, an anode (negative electrode) and a cathode (positive electrode). Based on the materials of electrolytes and fuels, fuel cells can be classified into the following types: PEMFC (polymer electrolyte membrane fuel cell), high temperature PEMFC, direct methanol fuel cell, molten carbonate fuel cell, phosphoric acid fuel cell, solid oxide fuel cell, alkaline fuel cell, etc [3]. Among them, PEMFCs have the largest market because they are higher power/energy ratio, higher efficiency, easy and safe handling. As is reported in [4], fuel cells grew by 40% in market in 2004, and 97% of the fuel cells used PEMPC technology. Since PEMPCs are more expensive than traditional internal combustion engines and have lower durability, it is very important to make sure PEMPCs work at best performance.

The performance of PEMPCs can be affected by such parameters as operating temperature, fuel cell pressure, the relative humidity of anode, the relative humidity of cathode, porosity of gas diffusion electrode (GDE), conductivity of GDE [5,6]. Researchers have done lots of experiments to find the relation between PEMPCs' performance and these parameters. In aspect of experiment process, most of the studies conducted one-influence-factor experiments or full-factorial experiments [7], and thus lead to a serious problem: they need to carry out so many experiments, especially when they need to consider different combination of influence factors. To reduce experimental time and cost, Torchio et al. [8] used a 2 4 factorial design to analyse the performance of a PEMFC stack. The Taguchi method, which is widely used in industry, was adopted to improve the experiment efficiency of PEMPC. Wu et al. [9] used the Taguchi method to analyse different parameters which affect the PEMFC performance and found out

* Corresponding author.
E-mail address: icwsr2015@zju.edu.cn (W. Yang).

http://dx.doi.org/10.1016/j.est.2017.09.005
2352-152X/© 2017 Elsevier Ltd. All rights reserved.

the primary optimums of the operating parameters, and eventually obtain the actual optimums of operating parameters by trained neural network. By applying the L18 2×37 orthogonal array of the Taguchi method for a PEM fuel cell, Wu et al. [10] indicated that flow orientation, temperature, anode and cathode humidification temperature can significantly affect the cell performance. Kathikeyan et al. [11] considered both operating and design parameters of PEMFC using standard orthogonal array of Taguchi method. Although an optimized operating parameters combination can be achieved using a Taguchi experimental method, it is still comparably time consuming and expensive. Besides, such experimental method cannot cover all the parameters combinations.

Numerical simulation is now becoming a trend in modelling PEMFC, because it can vary many parameters simultaneously. A three-dimensional computational fluid dynamics (CFD) model of PEMFCs is proposed to investigate the effects of different flow channel designs on the performance in [12], and simulation results were confirmed by the experimental data. Cheng et al. [13] used the same CFD model to obtain the maximum power density under 18 different operating parameters combinations. In the work, the author considered six design parameters and classified each parameter to three levels. By using the Taguchi method, they presented an optimal parameter combination after some statistical analysis. Taguchi method was used to perform the minimum number of experiments to determine the optimum operating conditions by use of 2nd order polynomial model. Such modelling procedure needs assumption of structure of model i.e. 1st order, 2nd order, . . . and so on [14]. This induces ambiguity in the predictive ability of the model to extrapolate/interpolate the experimental data because it is only valid in the given training/testing range to solve this problem, other class of methods those belonging to class of artificial intelligence (AI) such as artificial neural network based on multi-layer perceptron and radial basis function can be applied [15]. However, the accuracy of the models formulated depends on the number of training data available and it is computationally extensive to fine tune its architecture (number of hidden layers, number of neurons in each hidden layer). Recently, an evolutionary approach of genetic programming is also applied to build the explicit models for the power density of fuel cell as a function of its operating conditions [16]. The limitation of this approach is that it need large set of data to get efficiently trained and the computational time is large to find the optimum solutions.

Although some credible results can be achieved using the numerical simulation, we still need a more flexible way that can save time and resource to obtain the actual optimums of operating parameters, which can describe the relationship between the PEMFCs performance and the operating parameters with high accuracy, and to improve the performance of PEMFCs. Alternatively, this study shall explore the route of mathematical modelling and optimization, based on some numerical simulation results. We will apply the artificial intelligence approach of support vector machine (SVM) for generation of explicit models from the simulations data. SVM is an efficient tool in the fields of computational biology [17,18], chemistry [19,20] and agro-environmental assessments [21] to analyse the relationships between different factors. For example, in the aspect of computational biology, the increasing wealth of biological data from all many platforms requires more sophisticated computational approaches, and SVMs provide a straight way to realize the full potential of the data, which can lead to biological insight. SVMs can deal with high-dimensional and large datasets, and show great flexibility in modelling diverse sources of data [22–25]. Owing to this advantage, SVM approach provides an efficient method for optimizing a combination of numerous parameters for the PEMFCs.

This paper is organized as follows. In Section 2, the CFD model for PEMFCs and data collection is discussed. The research problem undertaken in this study is described in Section 3. Section 4 introduces the artificial intelligence approach of SVM to build a power density model. Section 5 discusses the performance of the power density model based on SVM approach. Section 6 provides simulation design of the proposed model. Finally, conclusion is made in Section 7.

2. CFD model for PEMFCs and data collection from simulations

2.1. Working mechanism and CFD model for PEMFCs

This section briefly describes the working mechanism of PEMFCs using the CFD simulation. As shown in Fig. 1, a fuel cell contains three active components: a fuel electrode (anode) which is covered with a layer of catalyst, an oxidant electrode (cathode), and an electrolyte sandwiched between them. H2 molecules will be oxidized to protons. Protons will then be transported through electrolyte membrane. On the cathode side, O2 will be reduced and react with proton on the triple phase boundary to form water molecules. To maintain continuous electric power generation, the reaction must be continuously proceeding.

A three dimensional CFD model of a PEM fuel cell is proposed in [11] to investigate the effects of flow channel designs on the performance (see Fig. 2), the simulation results showed good agreement with the experiment results. Our work will use the simulation data from the work by Cheng et al. [13], in which the credible CFD model was adopted to study the effect of operating parameters to PEMFC performance using a Taguchi method. The input operating conditions such as operating temperature, fuel cell pressure, the relative humidity of anode, the relative humidity of cathode, porosity of GDE, and conductivity of GDE were classified in the three levels (see Table 1) and the power density values under different working conditions were obtained using the CFD simulation. Using Taguchi's orthogonal arrays matrix method, the number of samples were decrease to 18.

2.2. Data collection from simulations

A total of 18 data samples are collected from the experimental simulation. The data comprises of the six operating conditions (represented by A–F) and the power density (Table 2) of PEMFC. Fig. 3 shows the bar chart of the collected data. From this Fig. 3, we know that most of the samples guarantee power density between 551 and 750 mW/cm^2, respectively, eight of them are between 551

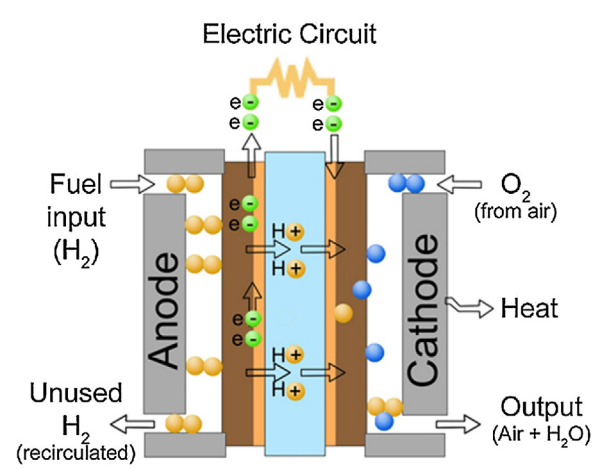

Fig. 1. Working mechanism of typical PEM fuel cell [26].

Download English Version:

https://daneshyari.com/en/article/5127353

Download Persian Version:

https://daneshyari.com/article/5127353

Daneshyari.com