Experimental Thermal and Fluid Science 79 (2016) 44–51

Contents lists available at ScienceDirect

Experimental Thermal and Fluid Science

journal homepage: www.elsevier.com/locate/etfs

Discharge coefficient of effervescent atomizers with the swirl motion phenomenon

Marek Ochowiak *

Poznan University of Technology, Faculty of Chemical Technology, Department of Chemical Engineering and Equipment, Poznan, Poland

ARTICLE INFO

Article history:
Received 4 March 2016
Received in revised form 14 June 2016
Accepted 22 June 2016
Available online 23 June 2016

Keywords:
Discharge coefficient
Analysis of spray processes
Effervescent atomizers
Swirl motion

ABSTRACT

The results of the experimental studies on the atomization process using the effervescent atomizers with the swirl motion flow are presented. A detailed analysis of the effect of the shape of the atomizer on the pressure drops and the discharge coefficient was performed. The inside-out effervescent-swirl atomizers with the cylindrical, conical and profiled orifice were used in the study. The highest values of the discharge coefficient were observed during the atomization with the profiled orifice and the smallest results were noticed for the cylindrical orifice. It was found that when the ratio of gas mass flow rate to the liquid mass flow rate was higher, the shape of the orifice did not play any important role. The equations for discharge coefficient for one- and two-phase flow were proposed. The obtained data is very important especially in the case of designing the effervescent-swirl atomizers.

1. Introduction

The liquid atomization is an operation that is important in many chemical processes such as agglomeration, spray drying or spray painting, to name a few [1–5]. Effervescent atomization is a method of twin-fluid atomization with a relatively small amount of gas in a form of bubbles supplied to the liquid phase inside the atomizer [1,3,6–8]. Effervescent atomizers belong to the group of internal mixing atomizers [9].

Knowledge on the discharge coefficient C_D is extremely important with regard to the design of atomizers and their control systems. C_D is an essential parameter describing the flow of liquid [10–13]. The discharge coefficient is defined as the ratio of the actual discharge to the theoretical discharge. The discharge coefficient may be related to the mass flow rate of a fluid through an atomizer orifice outlet of constant cross-sectional area through the following equation:

$$C_D = \frac{\dot{M}_L}{A_0 \cdot \sqrt{2\rho \cdot \Delta P}} \tag{1}$$

The value of the discharge coefficient for one-phase flow for the sharp edges orifice depends mainly on the contraction coefficient and ranges between 0.60 and 0.62 [14]. A calculation procedure for a discharge coefficient giving correct results is an interesting tool for the atomizer design and if one can rely on the predicted data, experimental verification at only several operation points is needed [15]. Published discharge coefficient predictions for twin-fluid atomizers are usually based on the empirical [10] or semi-empirical correlations [13,16]. A model for estimation of discharge coefficients of twin-fluid atomizers with internal gas-liquid mixing was proposed by Jedelsky and Jicha [15] in the following form:

$$C_D = 0,62\left(\frac{\eta_L}{\eta_{water}}\right)^{0,04}\left(\frac{\sigma_L}{\sigma_{water}}\right)^{0,02}\left(\frac{l_0}{d_0}\sin(2\beta)^{0.5}\right)^{-0.11} \times \frac{\dot{M}_L}{A_0(2\rho_L\Delta P)^{0.5}}\frac{1}{(1+GLR)} \tag{2}$$

where β is a half-angle of inclination of the mixing chamber wall. GLR is defined as:

$$GLR = \frac{\dot{M}_G}{\dot{M}_L} \tag{3}$$

The general equations reported in the literature give only the estimated results, which should be confirmed experimentally.

The actual state of knowledge of effervescent atomization encourages the researchers to undertake further studies, which are mainly experimental. The research where a wide range of changes in the characteristics of liquids, flow conditions and atomizers design are assumed, should allow to determine the factors influencing the formation of the atomized liquid stream. Therefore, the detailed studies on effervescent-swirl atomization process have been undertaken [17]. The atomizers with the

* Address: Poznan University of Technology, Department of Chemical Engineering and Equipment, ul. Berdychowo 4, PL 60-965 Poznan Poland.
E-mail address: ochowiak@op.pl

http://dx.doi.org/10.1016/j.expthermflusci.2016.06.026
0894-1777/

Nomenclature

$A, B, \ldots$	constant in the equation
C	concentration
$C_{D,tur}$	discharge coefficient for turbulent flow
D	diameter of mixing chamber
d	diameter
GLR	gas to liquid mass flow rates ratio
K	consistency factor
l	length
$\dot{M}$	mass flow rate
n	flow index
r	radius of nozzle orifice
α	spray angle
β	angle of inclination of outlet wall
$\dot{\gamma}$	shear rate
η	viscosity
ρ	density
σ	surface tension

Index

0	outlet
cor	correlation
exp	experiment
G	gas
h	hole
L	liquid
in	inlet
water	for water

different orifice shapes (the cylindrical, conical and profiled), cylindrical aerator and liquids with different properties have been studied. Several constructions of effervescent-swirl atomizers have been proposed with the aim to establish a relationship between gas and liquid flow rates at different *GLR* and discharge coefficients.

2. Experimental set-up

In order to analyze the discharge coefficient the experiment was designed and set up (Fig. 1a) to measure and regulate the gas and liquid flow rates and the pressure drop. The pressure meters Digi-Comb 1900 delivered by Tecsis GmbH and U-tube manometer (Zaklady Automatyki Rotametr Sp. z o.o.) and the rotameters VA-40 delivered by Krohne Messtechnik GmbH & Co KG were used.

During the test the tank was filled with liquid, which was pumped by CHI 2–30 (Grundfos) pump to the rotameters of the following measuring ranges: 0.68 and 6.8 dm^3/h, 4 and 40 dm^3/h, 25 and 250 dm^3/h and 100 and 1000 dm^3/h. The rotameters were scaled by weight using electronic scales of WLC 10/A2 (Radwag) with an accuracy of 0.1 g. The compressed air was flowed through valves and rotameters of the following measurement range: 0.05 and 0.5 m^3/h, 0.5 and 5 m^3/h and 4.9 and 49 m^3/h. The pressure of water and air was measured in the inlet ports of atomizer. The ports used in the pressure measurements are presented in Fig. 1b. The studies were performed for one and two-phase systems with the liquid phase volume flow rates ranging from 5 to 300 kg/h and gas flow rate up to 3 m^3/h, respectively. The experiments were carried out with liquids at temperatures of $T_L = 293 \pm 1$ K and $T_L = 308 \pm 1$ K and gas at temperature of $T_G = 293 \pm 1$ K (Table 1).

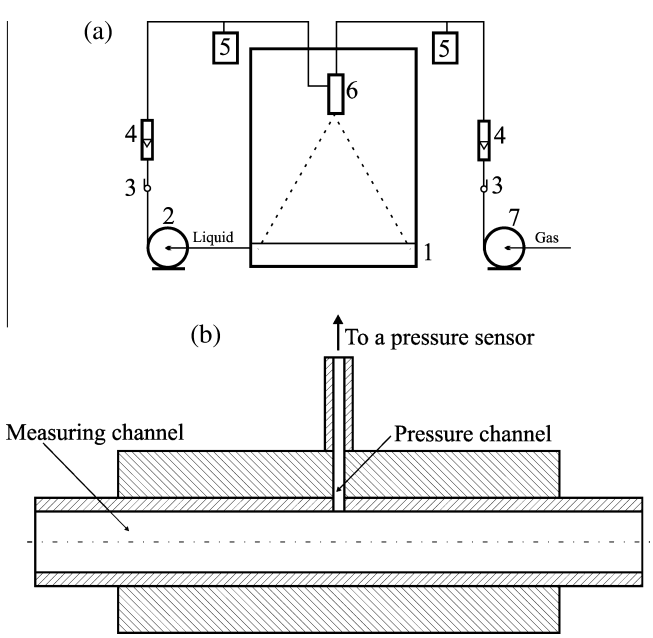

Fig. 1. The scheme of: (a) the test set-up; (b) ports for pressure measurements. 1 – tank, 2 – pump, 3 – valves, 4 – rotameters, 5 – pressure gauges, 6 – atomizer, 7 – compressor.

The effervescent atomizers that were used (Fig. 2a) throughout the study consisted of two inlet ports for gas and liquid, mixing chamber, aerator, and an atomizer tip. The dimensions of atomizer are presented in Table 2. All configurations of the atomizer were tested, having a typical geometry presented in the literature [6,9,18]. The inner diameter of the multi-hole cylindrical aerator is 2.5 mm. There are 40 holes in total with the diameter of $d_h = 0.8$ - mm arranged in 5 rows, in each 8 holes rotated by 45°. The last row is 9 mm from the atomizer orifice.

In each atomizer, different orifice tips (Fig. 2b) were mounted. The diameters of the exit orifices were determined by a computer analysis of the microscopic images of the holes. The accuracy of measurements was ±3%. The length of the exit orifices was measured with an accuracy of 0.05 mm. The dimensions of tips are presented in Table 3.

3. Results and discussion

3.1. One-phase flow

The results of the pressure drop at the exit orifice of the atomizer and the analysis of the discharge coefficient are presented below. The data presented in the literature Lefebvre [1], Orzechowski and Prywer [8] and Broniarz-Press et al. [19] showed that the atomization process and its efficiency depend on the construction of the atomizer. The published models allowing to predict the discharge coefficient values by giving the approximate results, require an experimental verification (especially for the specific constructions of the atomizers). The effervescent atomizer supplied only with liquid and working as a jet atomizer followed by the models for the discharge coefficient were used as the reference system, which has already been well described in the literature [1,8].

The discharge coefficient of the liquid for one-phase flow was analyzed in order to estimate the possibility of using the effervescent-swirl atomizers at very small gas flow rates (close to zero). The analysis allows to compare the obtained results with the literature reports on the one-phase atomizers [1,8,19–21].