Journal of Membrane Science 550 (2018) 219–229

Contents lists available at ScienceDirect

Journal of Membrane Science

journal homepage: www.elsevier.com/locate/memsci

Performance analysis of plate-and-frame forward osmosis membrane elements and implications for scale-up design

Sungyun Lee*, Yu Chang Kim

Department of Environmental Machinery, Korea Institute of Machinery and Materials, Daejeon 34103, Republic of Korea

ARTICLE INFO

Keywords:
Forward osmosis
Water recovery
Plate-and-frame element
Feed flow rate fraction
Normalized membrane area
Scale-up

ABSTRACT

Forward osmosis (FO) studies to date have focused on mass transport and applications. Additionally, further investigations regarding scale-up of FO system are required to commercialize this technology. In this study, the effect of operating parameters on FO performance was experimentally investigated using plate-and-frame FO membrane elements. Operating parameters such as membrane area, concentrations and flow rates of the feed and draw solutions were evaluated to determine their influence on water permeate flux, operating pressures, and water recovery in continuous operation mode. The membrane area was adjusted by series connection of FO elements, to a maximum value of 63 m^2 (nine elements). The feed flow rate was adjusted to 10, 15, and 20 LPM at draw flow rates of 5 and 10 LPM under various feed (10, 20, and 30 g/L) and draw (70, 110, and 150 g/L) concentration combinations. Increase of operating pressures was observed with increasing feed water flow rates and membrane area. However, the operating pressures of the plate-and-frame elements were significantly lower than that of spiral-wound elements. The lower operating pressure of serial-connected FO elements can be an advantage for a scale-up FO system design. In addition, water recovery data as a function of feed flow rate fraction were compared with model results based on the equilibrium between the feed and draw solutions. Estimation of the normalized membrane area (membrane area to initial feed flow rate) was evaluated to be a critical factor for achieving the desired water recovery. A normalized membrane area higher than 0.08 $m^2\,L^{-1}\,h$ is required for a scale-up design of an FO system to obtain the water recovery predicted by the equilibrium model.

1. Introduction

Forward osmosis (FO) has gained attention as an emerging membrane process, as it can be implemented using osmotic pressure, without a high hydraulic operating pressure [1–3]. In FO, a draw solution (DS) with a high osmotic pressure extracts water across a semi-permeable membrane from a feed solution (FS). Due to the low operating pressure, the fouling layers on FO membranes are less compact and can be cleaned using physical cleaning [3–7]. A number of FO applications have been investigated, such as desalination, food concentration, shale-gas wastewater treatment, oily water treatment and resource recovery [8–15].

Recent FO studies have improved our understanding of the FO process and provided insights into the development of a high-performance FO membrane. Studies of the mass transport phenomenon have shown that membrane characteristics, including higher water permeability, lower salt permeability, and lower membrane resistance structure, are important factors affecting FO membrane performance [16]. The current generation of thin-film composite FO membranes have been tailored based on these characteristics: for example, an FO membrane with a thin and porous support layer demonstrated significantly improved water flux by reduction of the internal concentration polarization (ICP) [17–19]. Adoption of novel materials, such as aquaporin, carbon nanotubes, hydrophilic materials and nanoparticles, has increased the water flux without any trade-off in salt permeability [19–22]. In addition to membrane characteristics, operating parameters and the design of FO membrane modules can influence the performance of FO systems. Previous studies have reported that temperature, pH, and flow rates affect the water flux and removal efficiencies of FO membranes [23–25]. Unlike the RO process, there are two streams, the FSs and DSs, entering the FO membrane. Due to the hydraulic interaction of the streams, a high hydraulic pressure on the feed side can cause compaction of the draw flow channel [26], and the membrane can be damaged if too high a pressure is applied on the draw side. Important insights into FO module design have also been gained by investigation of the effect of the membrane spacer on membrane fouling [27].

Although these previous studies have demonstrated the potential

* Corresponding author.
E-mail address: sungyunlee@kimm.re.kr (S. Lee).

https://doi.org/10.1016/j.memsci.2017.12.080
Received 2 October 2017; Received in revised form 30 November 2017; Accepted 29 December 2017
Available online 01 January 2018
0376-7388/

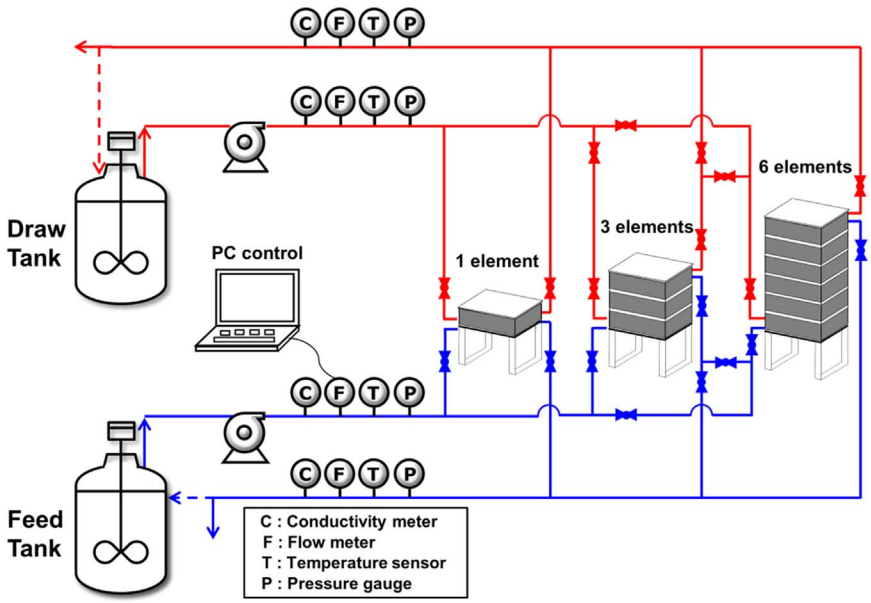

Fig. 1. Schematic diagram of the forward osmosis (FO) experimental set-up with plate-and-frame FO elements. FO modules with one, three, and six elements were installed. The modules can be operated individually, or two modules with three and six elements can be operated in series for a nine-element experiment.

feasibility of the FO process, further studies at the pilot-scale are required to resolve limitations in the design of a large-scale FO process. A number of limited pilot-scale studies have been conducted mainly focused on FO process applications, including as a pretreatment to RO to reduce the scaling potential, fertilizer-drawn FO for agricultural use, and volume reduction of wastewater [12,28,29]. Commercially available FO membrane element configurations are spiral-wound membrane elements and plate-and-frame membrane elements. However, studies related to large-scale FO process design have only been conducted using spiral-wound FO elements [26,30–33]. Although plate-and-frame membrane elements requires a larger system footprint due to low packing density compared to spiral-wound elements, the configuration of plate-and-frame element is simple so that wastewater with high amount foulants or high viscosities can be treated [1,34]. In addition, Spiral-wound type elements may not be suitable for large-scale processes using a series of connected elements, because of the pressure drop on the draw side due to spiral circuitous flow inside the membrane envelope [35]. The complex flow path of the draw could also induce a dead zone in the FO elements. Thus, plate-and-frame type elements would be more suitable for a large-scale FO process due to their relatively simple flow channel configuration.

Estimation of FO performance is difficult because of the various operating factors, including concentrations and flow rates of the feed and draw solutions. In addition, interactions between these operating factors make the estimation more complex. Thus, recent modeling studies of osmotically driven processes have attempted to simplify the operating flow rate conditions using a ratio of flow rates [36–38]. Deshmukh et al. used the feed flow rate fraction (the ratio of the feed flow rate to the sum of feed and draw flow rates) for estimation of the theoretical maximum recovery [37]. Assuming that the concentration equilibrium between the FS and DS occurs at the exit of the FO module, the overall recovery was readily obtained using the feed flow rate ratio, the initial DS and FS concentrations, and membrane characteristics. However, this estimation may not be valid for practical FO processes where the applied membrane area is limited. The use of the feed flow rate fraction for estimation of FO performance needs to be experimentally validated, and its application to a scale-up design should be investigated further.

The objective of this study is to investigate design factors for scale-up of an FO system using plate-and-frame FO membrane elements. The influence of operating parameters, including concentrations and flow rates of the feed and draw solutions, and the number of FO membrane elements, on the performance of plate-and-frame FO membrane elements was explored in continuous operation mode. Water recovery was mainly analyzed as a function of feed flow rate fraction depending on the operating parameters. The results showed that the feed flow rate fraction and the normalized membrane area (the ratio of the membrane area to the feed flow rate) were important factors determining the water recovery of the FO system. This study provides information such as the optimum FO membrane area and DS concentration for a scale-up design of an FO system.

2. Materials and methods

2.1. Plate-and-frame FO membrane element

Commercial plate-and-frame FO membrane elements and flat-sheet FO membrane coupons were used (Porifera, Hayward, CA, USA) in this study. The effective membrane area in a single element was 7 m^2. The dimensions of the element were 45.5 × 38.6 × 14.1 cm in length, width, and height. The element consisted of a 33 cell-frame unit with two flat-sheet FO membranes. The characteristics of the thin-film composite membrane were measured in bench-scale experiments, as described in our previous study [39]. The membrane water permeability (A), sodium chloride permeability (B), and membrane structural parameter (S) were 2.22 $L\,m^{-2}\,h^{-1}\,bar^{-1}$, 0.49 $L\,m^{-2}\,h^{-1}$, and 269 μm, respectively. According to the manufacturer, the elements use a net-type spacer with a thickness of 0.76 mm; no other detailed information relating to the flow channel was available. The hydrodynamic diameter (d_h) and voidage (ε) were assumed to be 0.76 mm and 0.80 to estimate the effect of the external concentration polarization (ECP) factor, based on a measured value for a net type spacer in RO membrane [35,40].

2.2. Experimental setup

Fig. 1 shows a schematic diagram of our FO pilot-scale system for the experiments. Three FO modules with one, three, and six FO elements were installed to investigate the effect of the membrane area on FO performance. Calibrated measuring devices, such as pressure transmitters (P118; Wise Sensor, Yongin, Korea), magnetic flow meters (KTM-800; Kometer, Incheon, Korea), and conductivity meters (Signet, El Monte, CA, USA), were employed at the inlet and outlet of both the FS and DS streams, and data were recorded every 10 s. The pumps