Applied Acoustics 90 (2015) 126–137

Contents lists available at ScienceDirect

Applied Acoustics

journal homepage: www.elsevier.com/locate/apacoust

Numerical simulation of automobile side-window buffeting noise based on fluid–structure interaction

Zhengqi Gu [a,b], Yiqi Zong [a,*], Zemin Luo [a], Zhendong Yang [a,c], Caimao Jiang [a], Zhen Chen [a]

[a] State Key Laboratory of Advanced Design and Manufacture for Vehicle Body, Hunan University, Changsha, Hunan 410082, China
[b] School of Mechanical Engineering, Hunan University of Technology, Zhuzhou, Hunan 412007, China
[c] School of Aerospace, Mechanical and Manufacturing Engineering, RMIT University, Melbourne, Victoria 3083, Australia

ARTICLE INFO

Article history:
Received 15 May 2014
Received in revised form 8 October 2014
Accepted 14 November 2014
Available online 3 December 2014

Keywords:
Buffeting noise
Fluctuating pressure
Side window
Fluid–structure interaction
Noise radiation

ABSTRACT

Large-eddy simulation method was employed to compute the buffeting noise of a simple deep cavity model. Compared with the results of wind tunnel experiments, the numerical results coincided well with the experimental results, which further validated the correctness of Large-eddy simulation method. Large-eddy simulation method was employed to calculate automobile side-window buffeting noise when the side-window near the driver was partially opened by 25%, and the road test data validated its correctness. The flow field results were loaded to the finite element model to compute dynamic response of the car's windows, the weak vibration of windows was excited by the air energy exchange between interior and exterior when the car at high speed. Acoustic radiation of window structure, sound pressure levels of field points in the frequency domain, panel acoustic contribution analysis of window structure were obtained by the vibration solution for the windows. The results demonstrated that the noise radiation caused by the windows' vibration aroused the acoustic response significantly at some certain frequencies, although side-windows buffeting noise dominated in the low frequency domain. The rear window acoustic contribution accounted for the major part of the total pressure. Compared with other three side-windows, the contribution of the partially opened side-window to the total pressure was the greatest.

© 2014 Elsevier Ltd. All rights reserved.

1. Introduction

The vortex streets with a certain propagation velocity are generated by airstreams through vehicle body openings during the car at a high speed. The buffeting noise is caused by the energy exchange between vortex streets and cavity modal. With a high intensity in the low frequency domain, the buffeting noise is a type of aerodynamic noise [1]. However, the vibration of the car's windows is excited by the fluctuating pressure on the windows, for the air inside and outside the car exchange energy each other. Then noise radiation inside the car will be caused by the vibration of the car's windows. It is a type of noise in the low frequency domain. All above is of significance to study the effect of two types of noise on the driver and passengers inside the vehicle.

Early analytic work on the solution of buffeting noise problem by Bodger et al. [2] in the early 1960s in relation to the coach rear window buffeting noise. The fundamental feature of this type of problem was that the car compartment was similar to a classic Helmholtz resonator model when the window was open, and that the resonance was caused by vortex shedding from the aperture of the window. This type of problem had been studied by several other authors using computational fluid dynamics (CFD) [3–7]. For instance, CFD method was applied to calculate the side-window buffeting noise of SUV model [3,4], but the structural vibration and noise radiation were ignored. Moreover, in others the numerical solution was compared with the experimental result [5–7], yet the interaction between fluid and structure was omitted. In the present study, boundary layer noise was found to be dominate at the later stage of noise propagation as the flow becomes steadier [8]. The weakly compressible turbulent formulations derived by Wang [9] on the basis of the general fluid control equations, were more applicable to solve automobile side-window buffeting noise problem. De-noising method for buffeting noise was investigated by Chen and Qian [10]. In their study, buffeting noise could be significantly reduced by optimizing window openings. The results from the laser imaging and road tests were applied to describe the principle of optimization method. Passive control methods to reduce the wind buffeting noise were applied by Yang [11]. Optimization of mirror angle with respect to the front side glass was adopted by Walker [12] to minimize buffeting noise.

* Corresponding author. Tel.: +86 15211018482.
E-mail address: zongyiqi87@126.com (Y. Zong).

http://dx.doi.org/10.1016/j.apacoust.2014.11.003
0003-682X/© 2014 Elsevier Ltd. All rights reserved.

All the aforementioned studies considered essentially the flow-induced noise problem or the buffeting noise problem. None of these studies dealt with the more realistic and complicated fluid–structure coupling acoustic problem. Indeed, as the air outside the car flowed through the aperture of the window, it exchanged energy with the air inside the car, which in turn induced the vibration of the windows, then radiated noise toward automobile passenger compartment.

The objectives of this paper are fourfold: first, large eddy simulation control equations are applied to calculate the buffeting noise of a simple deep cavity model. The numerical results coincide well with the experimental results. It shows the simulation method is applicable to the buffeting noise problem. Second, this simulation method is used in the calculation of vehicle buffeting noise when the side-window near the driver is partially opened by 25%. Third, data transmission on the interface between the fluid and solid is performed with the results of large eddy simulation and the interpolation method. Furthermore, dynamic analysis of window structure is obtained. Fourth, boundary element method is adopted for the numerical simulation of noise radiation toward automobile passenger compartment. Then the panel acoustic contribution and modal participation factor analysis of window structure are discussed.

2. LES governing equations

Applying a Favre-filtered operation to the continuity equation and incompressible Navier–Stokes equations yield the LES equations. The filtered equations are obtained as

$$\frac{\partial}{\partial t}(\rho\bar{u}_i)+\frac{\partial}{\partial x_j}(\rho\bar{u}_i\bar{u}_j)=\frac{\partial\bar{\sigma}_{ij}}{\partial x_j}-\frac{\partial\bar{p}}{\partial x_i}-\frac{\partial\tau_{ij}}{\partial x_j}, \tag{1}$$

$$\frac{\partial\rho}{\partial t}+\frac{\partial}{\partial x_i}(\rho\bar{u}_i)=0, \tag{2}$$

where ρ is the density, $\bar{u}_i$ is the filtered velocity components in the x_i direction, $\bar{p}$ is the filtered pressure, the filtered viscous stress tensor is given as

$$\bar{\sigma}_{ij}=\mu\left(\frac{\partial\bar{u}_i}{\partial x_j}+\frac{\partial\bar{u}_j}{\partial x_i}\right). \tag{3}$$

Here, μ is the kinetic viscosity.

The SGS stress tensor τ_{ij} has to be modeled in order to close the system of equations. A standard Smagorinsky model for SGS stresses is written as

$$\tau_{ij}=-2v_t\bar{S}_{ij}+\frac{\delta_{ij}}{3}\tau_{kk}, \tag{4}$$

$$v_t=(C_s\bar{\Delta})^2(2\bar{S}_{ij}\bar{S}_{ij})^{1/2}, \tag{5}$$

where $\bar{S}_{ij}$ is the SGS strain-rate tensor, $\bar{\Delta}$ is the characteristic length scale of the largest SGS eddies and C_s is the Smagorinsky model coefficient. In the practical application, $C_s=C_v-C_v exp(y^*/A^*)$. Here, y^* denotes the minimum distance from the grid to the wall, A^* is the semi-empirical constant, which is evaluated $A^*=25, C_v$ is the Van Driest model coefficient generally taken as $C_v=0.1$.

3. Numerical calculation and experimental research of the cavity noise

3.1. Computational details

A simple cavity model is chosen to predict the buffeting noise for saving computing resources. As shown in Fig. 1, the cavity model is similar to an automotive compartment with the open side-window. The length, width and height of the model are 0.4 m, 0.3 m, 0.29 m respectively. The opening is in the middle of the top side of the box. The geometric parameters are: 0.1 m × 0.24 m × 0.015 m. The number of the grid element resolution used for the simulation is about three million. The boundary layer has a thickness of $\delta/h_1=1.2$ (based on the thickness of the first boundary layer h_1). The grid can be observed in Fig. 2.

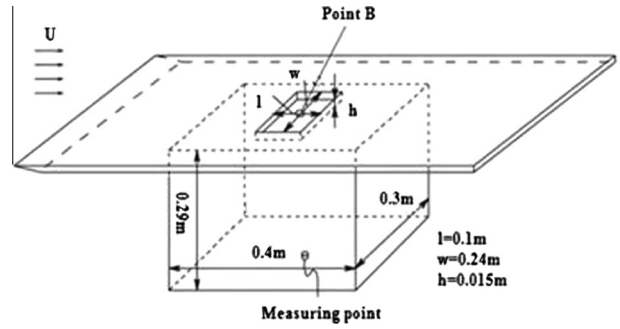

Fig. 1. Geometric model of the simple cavity.

The results of the steady state computation are used in the set of the initial values for calculating the transient state behavior. Table 1 describes the boundary conditions of the total computational domain.

In this paper, *Realizable* $k-\varepsilon$ is applied to calculate the steady-state behavior. The parameters used for the calculation are presented in Table 2. LES model is applied to calculate the transient-state behavior. The set of the transient-state solver is given in Table 3.

The total time duration is set as 1 s. The time step of the calculation is 0.002 s. Because the computational solution gradually tends to be stable, the result between 0.3 s and 1 s is chosen in the analysis.

3.2. Experimental details

The acoustic testing experiment is carried out in the aero-acoustic wind tunnel of Purdue University. The necessary instruments in the experiment as follows: the Test Lab equipment of LMS company in Belgium, which integrates Test Lab 7A software analysis system and Scadas mobile equipment with 16 channels (Fig. 3), 1/4 capacitive microphone (type 4136) and preamplifier (type 2609) of B&K company in Denmark. As shown in Fig. 4, the cavity is supported by two beams. The top side of the openings and the floor of the wind tunnel are placed in the same horizontal plane. The top side of the microphone (placed in the middle of the bottom side of the cavity) and the bottom of the cavity are placed in the same horizontal plane.

3.3. Results and discussion

Figs. 5 and 6 describe the changing process of fluctuating pressure at the measuring point in time domain (the case are 15 m/s

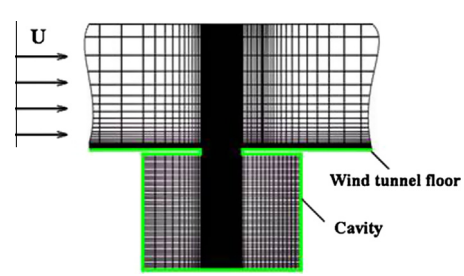

Fig. 2. Grid distribution in the longitudinal symmetric plane.

Download English Version:

https://daneshyari.com/en/article/754525

Download Persian Version:

https://daneshyari.com/article/754525

Daneshyari.com