Journal of Hazardous Materials 362 (2019) 17–35

Contents lists available at ScienceDirect

Journal of Hazardous Materials

journal homepage: www.elsevier.com/locate/jhazmat

Identification of fragmentation mechanism and risk analysis due to explosion of cylindrical tank

Mirko Djelosevic*,[1], Goran Tepic

Faculty of Technical Sciences, University of Novi Sad, Trg Dositeja Obradovica 6, 21000 Novi Sad, Serbia

GRAPHICAL ABSTRACT

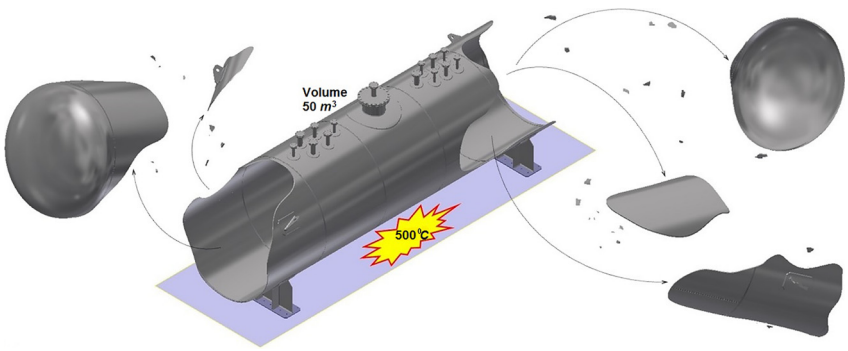

ARTICLE INFO

Keywords:
Explosion
Fragmentation
Cylindrical tank
Missile
Risk analysis

ABSTRACT

This study presents a completely new methodology for fragmentation analysis due to the explosion of cylindrical tanks. The identification of fragments' kinematic parameters was accomplished with an exact system of differential equations of motion with good convergence and high accuracy of numerical results. The fluctuation effect of the aerodynamic force of the fragments on their range is interpreted by statistical distributions. The direction and intensity of the fragments' initial velocity are determined by the inertial model. An original probabilistic mass method is proposed to represent the discrete distribution of the number of generated fragments. The correlation between the number and mass of the fragments was established by Monte Carlo simulation. The estimation of the fracture lines was carried out by the tank stress mapping procedure using data from the ANSYS software. The identification of potential fracture lines with the knowledge of the number-to-mass dependence of the fragments allows a reliable estimate of the shape of the generated fragments. The estimated sectoral risk due to tank fragmentation is consistent with literary accident data. The presented methodology can be fully applied to the assessment of the risk of other types of tanks and process installations.

1. Introduction

The risk assessment due to fragmentation of pressure vessels requires adequate hazard modelling, and the creators of the first fragmentation models were Moore and Baker [1,2]. Holden and Reeves showed that in 77% of accidents fragmentation was the result of explosions of pressurized vessels generating from 1 to 9 fragments [3]. Holden found that 60% of the generated fragments covered a sectoral

* Corresponding author.
E-mail addresses: djelosevic.m@uns.ac.rs (M. Djelosevic), gtepic@uns.ac.rs (G. Tepic).
[1] http://www.ftn.uns.ac.rs.

https://doi.org/10.1016/j.jhazmat.2018.09.013
Received 3 March 2018; Received in revised form 20 August 2018; Accepted 4 September 2018
Available online 06 September 2018
0304-3894/ © 2018 Elsevier B.V. All rights reserved.

Nomenclature

D	Tank out diameter (D = 2600 mm)
h	Elliptic end cap height (h = 650 mm)
δ	Tank wall thickness (δ = 14 mm)
p	Tank operating pressure (p = 16.7 bar)
σ_x	Tank longitudinal stress
σ_θ	Tank circumference stress
a_0	Fragment initial acceleration
F	Fragment inertial force
ρ	S355J2G3 steel density (ρ = 7850 kg/m^3)
p_{cr}	Critical tank pressure
R_m	Steel S355J2G3 tensile strength
m_{fr}	Fragment mass
W_D	Drag force
W_L	Lift force
G	Gravitational force ($G = mfr{\cdot}g$, g = 9,81 m/s^2)
ρ_v	Air density (ρair = 1.20 kg/m^3)
C_D	Drag force coefficient
C_L	Lift force coefficient
A_D	Fragment surface normal projection
A_L	Fragment surface tangential projection
v_{fr}	Fragment velocity
a_{fr}	Fragment acceleration
k_D	Drag acceleration coefficient
k_L	Lift acceleration coefficient
x	Horizontal coordinate
y	Vertical coordinate
Δt	Time interval

angle of ± 30° on both sides of the tank [4]. Some recent studies were based on the results of these studies [5,6]. Mébarki et al. suggested an entropy model for estimating the number of generated fragments [5]. Typical explosions of tanks following industrial accidents were related to the BLEVE phenomenon [7,8]. The risk assessment due to tank fragmentation involves modelling the fragment flight, and the literature exclusively used a simplified model for fragmentation analysis [9]. Gubinelli et al. used the above simplified model but did not specify the limits of its application [10]. Application of this model requires knowledge of initial conditions, such as initial velocity. Baum performed a series of experiments with tanks weighing up to 82.5 kg and concluded that the initial velocity did not exceed 54.6 m/s [11]. The size of the tank had no effect on the number of generated fragments [12]. However, the initial velocity changed with changing the size (mass) of the tank. Baum showed that the share of the fragment's kinetic energy could be up to 20% of the expansion energy [13]. Hauptmanns reported that the share of the fragment's kinetic energy ranged from 20% to 50% (expected values 30%) relative to the tank explosive energy [14]. Mébarki et al. claimed that the probability of appearance of a fragment with a share of kinetic energy from 22% to 24% was less than 1%. The above data show considerable dissipation of the initial velocity and mutual disagreement of results. Hauptmanns estimated the risk due to fragmentation based on kinetic energy of fragments [14,15]. The essential parameters for a valid estimation of mechanical damage to adjacent objects must include direction and acceleration at the fragment's impact. Mébarki et al. investigated the influence of fragment direction while ignoring the effect of acceleration [16]. Gubinelli and Cozzani analyzed the configuration of fragments and noted that in 55% of cases tank end cap separated from the cylindrical part of the tank [17]. The same authors estimated on a sample of 140 accidents the number of generated fragments of a particular fragmentation configuration and proposed a model for determining the drag coefficient [18]. The initial direction and velocity of fragments in the fragmentation of pressurized vessels are important information for the quantitative risk assessment due to damage to process installations [19]. Using the previously described methodologies, Tugnoli et al. assessed the risk due to fragments effect in the case study of Mediterranean Refinery of Milazzo, Italy [20]. The experimental analysis in the explosion of the LPG tank was carried out by Stawczyk [21]. Hazards resulting from fragmentation very often cause a sequential chain of domino effects [22]. Sun et al. analyzed multiple domino scenarios caused by fragments [23]. These authors applied the methodology suggested by Mébarki et al. [6]. Trajectory equations were derived using a simplified model [9], while fragmentation was interpreted by Monte Carlo simulation. The authors did not give enough information on the manner of integration of the simplified model into the simulation process and its constraints. The influence of the fragmentation parameters indetermination was considered by Zhang and Chen [24]. The aim of the proposed study is to develop a completely new methodology for analyzing fragmentation in terms of eliminating the epistemic uncertainty of relevant parameters while not diminishing the importance of the above studies.

2. Methodological approach

Process industry plants are highly sensitive systems in terms of generating a domino effect, whose risk assessment requires the identification of fragmentation hazards. The most common equipment for process plants includes pressure vessels that can be of different shapes (cylindrical horizontal, cylindrical vertical, spherical, etc.). An explosion of pressurized vessels is accompanied by a fragmentation effect that can jeopardize objects at greater distances [19]. The complexity of the fragmentation mechanism in conjunction with a high degree of uncertainty of shape, initial velocity, the direction of initial velocity, the coefficient of air resistance and thrust of fragment greatly aggravates a reliable risk assessment. In the last few years, great efforts have been made to eliminate the uncertainty of fragmentation parameters, primarily from the aspect of air resistance coefficient and the direction of initial velocity [18,19]. The outlined methodological approach presents the continuity of these studies to identify the parameters of aleatoric and epistemic uncertainty.

2.1. General case

The methodological framework for identification of fragmentation risk allows defining the geometry and kinematics of generated fragments. The concept of the research methodological structure includes the integration of probabilistic mass method, inertial model, aerodynamic fluctuation, and the simulation model of fragmentation. The implementation of these techniques does not depend on the type of the tank and is illustrated by the algorithm in Fig. 1. The probabilistic mass method plays the most important role in the tank fragmentation analysis and is based on Monte Carlo simulation and stress analysis. Monte Carlo simulation gives the probabilities of generated fragments under ideal fragmentation conditions. The correction of these probabilities results from stress unevenness and is carried out through estimated mass factors using the tank stress analysis. Stress mapping is performed to identify potential fracture lines due to different load types, such as internal pressure, fire, fragment impact, etc. The tank fragmentation probability is obtained by combining the results of an ideal fragmentation with mass factors. These probabilities show the spread of fracture lines along the discussed segments of the tank. The number and size of these segments are determined in relation to nominal stress. Nominal stress represents the average stress value that dominates the greater part of the tank. Maximum fracture probability corresponds to the largest segment, without spreading to other segments and decreases

Download English Version:

https://daneshyari.com/en/article/10151616

Download Persian Version:

https://daneshyari.com/article/10151616

Daneshyari.com