ARTICLE IN PRESS

Engineering Science and Technology, an International Journal xxx (2018) xxx–xxx

HOSTED BY

ELSEVIER

Contents lists available at ScienceDirect

Engineering Science and Technology, an International Journal

journal homepage: www.elsevier.com/locate/jestch

Review

Review of static and dynamic wireless electric vehicle charging system

Chirag Panchal *, Sascha Stegen, Junwei Lu

Griffith School of Engineering, Griffith University, Nathan Campus, Brisbane 4111, Australia

ARTICLE INFO

Article history:
Received 25 January 2018
Revised 14 May 2018
Accepted 19 June 2018
Available online xxxx

Keywords:
Electric vehicles
Electromagnetic compatibility
Finite element method
Wireless charging system
Wireless power transfer
Wireless electric vehicle charging system

ABSTRACT

Electrified transportation will help to reduce green-house gas emissions and increasing petrol prices. Electrified transportation demands that a wide variety of charging networks be set up, in a user-friendly environment, to encourage adoption. Wireless electric vehicle charging systems (WEVCS) can be a potential alternative technology to charge the electric vehicles (EVs) without any plug-in problems. This paper outlines the current available wireless power transfer technology for EVs. In addition, it also includes wireless transformer structures with a variety of ferrite shapes, which have been researched. WEVCS are associated with health and safety issues, which have been discussed with the current development in international standards. Two major applications, static and dynamic WEVCS, are explained, and up-to-date progress with features from research laboratories, universities, and industries are recorded. Moreover, future upcoming concepts-based WEVCS, such as "vehicle-to-grid (V2G)" and "in-wheel" wireless charging systems (WCS) are reviewed and examined, with qualitative comparisons with other existing technology.

© 2018 Karabuk University. Publishing services by Elsevier B.V. This is an open access article under the CC BY-NC-ND license (http://creativecommons.org/licenses/by-nc-nd/4.0/).

Contents

1. Introduction . . . 00
2. Wireless charging system for EVs . . . 00
   2.1. Basic operating principle . . . 00
   2.2. Wireless power transfer methods . . . 00
      2.2.1. Capacitive wireless power transfer . . . 00
      2.2.2. Magnetic gear wireless power transfer . . . 00
      2.2.3. Inductive power transfer . . . 00
      2.2.4. Resonant inductive power transfer . . . 00
   2.3. Compensation networks . . . 00
   2.4. Wireless transformer topologies . . . 00
      2.4.1. Coil shapes . . . 00
      2.4.2. Magnetic ferrite shapes . . . 00
      2.4.3. Protective and supportive structure . . . 00
   2.5. Health and safety concerns . . . 00
   2.6. Health and safety standards . . . 00
   2.7. Challenges and hurdles to the deployment of WEVCS . . . 00
3. Application of WEVCS . . . 00
   3.1. Static wireless electric vehicle charging system (S-WEVCS) . . . 00
   3.2. Dynamic wireless electric vehicle charging system (D-WEVCS) . . . 00
4. Future application concepts of WEVCS . . . 00
   4.1. Wireless vehicle to grid (W-V2G) . . . 00
   4.2. In Wheel WCS . . . 00

* Corresponding author.
E-mail address: c.panchal@griffith.edu.au (C. Panchal).
Peer review under responsibility of Karabuk University.

https://doi.org/10.1016/j.jestch.2018.06.015
2215-0986/© 2018 Karabuk University. Publishing services by Elsevier B.V.
This is an open access article under the CC BY-NC-ND license (http://creativecommons.org/licenses/by-nc-nd/4.0/).

Please cite this article in press as: C. Panchal et al., Review of static and dynamic wireless electric vehicle charging system, Eng. Sci. Tech., Int. J. (2018), https://doi.org/10.1016/j.jestch.2018.06.015

4.2.1. Configuration of IW-WCS . . . 00
4.2.2. Computational analysis . . . 00
4.2.3. Comparison of In-Wheel WCS vs. Via Wheel WCS . . . 00
5. Conclusion . . . 00
References . . . 00

1. Introduction

Wireless Charging Systems (WCS) have been proposed in high-power applications, including EVs [1], and plug-in electric vehicles (PEVs) [2] in stationary [3] applications. In comparison with plug-in charging systems, WCS can bring more advantages in the form of simplicity, reliability, and user friendliness [4]. The problem or limitation associated with WCS is that they can only be utilised when the car is parked or in stationary modes, such as in car parks, garages, or at traffic signals [3]. In addition, stationary WCS have some challenges, such as electromagnetic compatibility (EMC) issues, limited power transfer, bulky structures, shorter range, and higher efficiency [5–7]. In order to improve the two areas of range and sufficient volume of battery storage, dynamic mode of operation of the WCS for EVs has been researched [8,9]. This method allows charging of battery storage devices while the vehicle is in motion. The vehicle requires less volume of expensive battery storage and the range of transportation is increased [10]. However, a dynamic WCS has to face two main hurdles, large air-gap and coil misalignment, before it becomes widely accepted. The power transfer efficiency depends on the coil alignment and air-gap distance between the source and receiver [5,11]. The average air-gap distance varies from 150 to 300 mm for small passenger vehicles, while it may increase for larger vehicles. Aligning the optimal driving position on the transmitter coil can be performed easily because the car is driven automatically in the dynamic mode. In addition, different compensation methods, such as series and parallel combinations, are employed on both the transmitting and receiving sides to reduce parasitic losses and improve system efficiency [12,13]. In this review paper, the fundamental operation of WCS for EVs, including methods of power transfer, is analysed. In addition, a variety of wireless transformer structures are explained in order to improve power transfer efficiency. This paper also outlines current developments in the static and dynamic modes of WEVCS in both the commercial and university sectors.

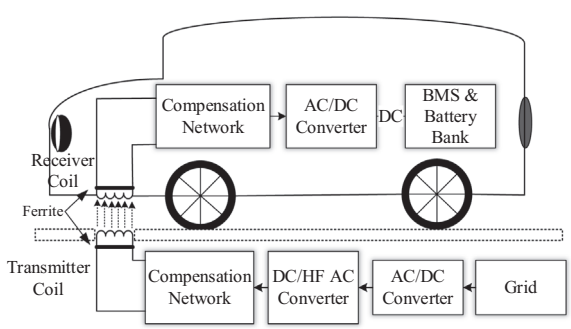

Fig. 1. Basic block diagram of static wireless charging system for EVs.

2. Wireless charging system for EVs

2.1. Basic operating principle

The basic block diagram of the static WCS for EVs is illustrated in Fig. 1. To enable power transfer from the transmission coil to the receiving coil, AC mains from the grid is converted into high frequency (HF) AC through AC/DC and DC/AC converters. In order to improve overall system efficiency, series and parallel combinations based compensation topology are included on both the transmitting and receiving sides [14,15]. The receiving coil, typically mounted underneath the vehicle, converts the oscillating magnetic flux fields to HF AC. The HF AC is then converted to a stable DC supply, which is used by the on-board batteries. The power control, communications, and battery management system (BMS) are also included, to avoid any health and safety issues and to ensure stable operation. Magnetic planar ferrite plates are employed at both transmitter and receiver sides, to reduce any harmful leakage fluxes and to improve magnetic flux distribution.

2.2. Wireless power transfer methods

Since the introduction of wireless charging systems for EVs, four methods for the design of WEVCS have been utilised: traditional inductive power transfer (IPT), capacitive wireless power transfer (CWPT), magnetic gear wireless power transfer (MGWPT) and resonant inductive power transfer (RIPT). Table 1 presents the summary of available wireless power transfer technologies for battery operated electric vehicles (BEVs) [1,3,7,16–18].

2.2.1. Capacitive wireless power transfer

The low cost and simplicity of CWPT technology, using advanced geometric and mechanical structures of the coupling capacitors [19,20], is very useful for low-power applications, such as portable electronics devices [21], cellular phone chargers [22], and rotating machines [23]. Fig. 2 shows a typical schematic diagram of the series resonant circuit based CPWT. In the CWPT, coupling capacitors are utilised to transfer power from the source to the receiver instead of using coils or magnets. The main AC voltage is applied to an H-bridge converter though power factor correction circuitry. High-frequency AC generated by the H-bridge passes

Table 1
Overview of dierent methods of Wireless Power Transfer (WPT) for EVs.

WPT methods	Performance			Price	Size/ Volume	Complexity of design	Power Level	Suitability for WEVCS
	Efficiency	EMI	Frequency range (kHz)					
Inductive	Medium/High	Medium	10–50	Medium/High	Medium	Medium	Medium/High	High
Capacitive	Low/Medium	Medium	100–600	Low	Low	Medium	Low	Low/Medium
Permanent magnet	Low/Medium	High	0.05–0.500	High	High	High	Medium/Low	Low/Medium
Resonant inductive	Medium/High	Low	10–150	Medium/High	Medium	Medium	Medium/Low	High

Please cite this article in press as: C. Panchal et al., Review of static and dynamic wireless electric vehicle charging system, Eng. Sci. Tech., Int. J. (2018), https://doi.org/10.1016/j.jestch.2018.06.015

Download English Version:

https://daneshyari.com/en/article/11021054

Download Persian Version:

https://daneshyari.com/article/11021054

Daneshyari.com