Journal of Food Engineering 142 (2014) 138–145

Contents lists available at ScienceDirect

Journal of Food Engineering

journal homepage: www.elsevier.com/locate/jfoodeng

Effect of mixing speed and time on some textural and physicochemical properties of wheat starch gels

Asgar Farahnaky [a,*], Afsaneh Alishahi [a], Mahsa Majzoobi [a], Jafar Al-Hakkak [b]

[a] Department of Food Science and Technology, School of Agriculture, Shiraz University, Shiraz, Iran
[b] The New Zealand Institute for Plant & Food Research Limited, Auckland, New Zealand

ARTICLE INFO

Article history:
Received 19 January 2014
Received in revised form 18 April 2014
Accepted 8 June 2014
Available online 17 June 2014

Keywords:
Corn starch
Starch gel
Physicochemical properties
Mixing speed
Mixing time

ABSTRACT

The physicochemical and textural properties of wheat starch gels prepared at different mixing speeds, 15, 150 and 350 rpm and heating times, 10, 30, and 45 min at 95 °C were studied and compared. With increasing time and mixing speed most of the textural properties of starch gels obtained from texture profile analysis and residual modulus of Maxwell model obtained from stress relaxation data decreased. The samples prepared at 15 rpm and 10 min heating had the highest hardness, springiness, cohesiveness, chewiness and gumminess values whilst, the gels prepared at 350 rpm and 45 min had the lowest values for these textural properties. The images of starch gels taken by scanning electron microscopy indicated that with increasing the time and speed of mixing, honeycomb-like structure of the gels formed larger cells with thicker cell walls. Intrinsic viscosity of the samples decreased with increasing heating time and mixing speed indicating depolymerisation of starch biopolymers. Rapid Visco Analyzer data showed reduction in cold-water viscosity of starch gels with increasing time and mixing speed. Mixing speed and time during starch pasting are determining factors of final textural properties, therefore require through control to achieve final products of consistent characteristics.

© 2014 Elsevier Ltd. All rights reserved.

1. Introduction

Gelatinization is an important physical phenomenon that occurs in starch-based foods during processing. It is a process that disrupts the native molecular orders of starch granules in the presence of water during thermal processing (Park et al., 2009). During gelatinization process, granular swelling, loss of molecular orders, loss of birefringence and crystallinity, water uptake, marked increase in viscosity and the polysaccharides (amylose) solubilization occur (Liu et al., 2009; Cooke and Gidley, 1992; Derby et al., 1975; Donovan, 1979). The extent of each of these events depends on the species and variety of starch source and starch processing conditions (Bocharnikova et al., 2003; Fredriksson et al., 1998; Jay-Lin and Chen, 1992; Lii et al., 1996; McPherson and Jane, 1999; Tester and Morrison, 1990; Tsai et al., 1997; Yuryev et al., 1998; Zeng et al., 1997; Cooke and Gidley, 1992).

The production of starch-based products frequently includes the application of a combination of shear stresses such as mixing and thermal treatment at a particular time. For example in extrusion processing high shear forces and heat are applied to raw materials for a short period of time. It is well documented that applying shear and heat to starch results in molecular weight reduction (Baud et al., 1999; Willett et al., 1997). van den Einde et al. (2004) showed that the maximum applied shear stress during thermomechanical treatments affects the extent of mechanical degradation of waxy corn starch but thermal breakdown effects can be neglected. However, in many practical implications temperature and heating time of a starch paste play important roles in long term processings. Thermal effect is considered as the second important factor of shear-related effects in depolymerisation of starch molecules.

Fujio et al. (1995) and Igura et al. (1997) showed that 15 min heating of corn and sweet potato starch at 150 °C resulted in a decrease of its molecular weight. Byars (2003) found that thermal degradation effects are important during jet cooking of waxy corn starch. Majzoobi and Farahnaky (2010) investigated the physicochemical properties of extruded wheat, maize and rice starch. They showed that degradation of amylopectin could occur during extrusion cooking and differences in composition and molecular structure of starch samples along with the breakdown of amylopectin may be the key factors in explaining their different physicochemical behaviors.

Many studies have shown degradation and molecular weight reduction of starch during thermomechanical treatments (Diosady et al., 1985; Parker et al., 1990; Willett et al., 1997).

* Corresponding author. Tel.: +98 711 6138229; fax: +98 711 6289017.
E-mail address: farahnak@shirazu.ac.ir (A. Farahnaky).

http://dx.doi.org/10.1016/j.jfoodeng.2014.06.009
0260-8774/© 2014 Elsevier Ltd. All rights reserved.

Zheng et al. (1995) used single-screw extrusion performed at low temperature to show the importance of shearing on granular size and the degree of cooking as defined by the relative decrease of melting enthalpy as determined by DSC. Yam et al. (1994) used instrumented twin-screw extruders to demonstrate the effect of this phenomenon on the transformation of the starchy fraction of corn meal, as evaluated by DSC. Zheng and Wang (1994) also simulated thermomechanical processing using a capillary rheometer. Thermal energy was applied prior to mechanical processing, and it was concluded that high shearing rates led to low residence times in the capillary. Most of previous studies investigated starch changes only during extrusion process as a limited moisture system, which provides rather an incomplete description of end product gelling characteristics of different starches. More investigations are required to further qualify and quantify the effects of shear (mixing) and time and macromolecular degradation on the end product properties especially in the case of high moisture systems which mixtures of starch and water are used to create gels after gelatinization and storing in a refrigerator or at ambient temperature. The aim of this study was to examine the importance of using controlled mixing speed and time during processing of starch-based products in creating better starch-based gels with desired attributes. Therefore, textural and some physicochemical properties of wheat starch gels prepared by pasting at different mixing speeds and heating times were investigated and compared.

2. Materials and methods

2.1. Starch

Wheat starch was purchased from Fars Glucosin Company (Fars, Iran). Chemical composition content was determined according to the AACC (2000) methods.

2.2. Preparation of starch paste and gels

A 12% (w/v) suspension of wheat starch (6 g in 50 ml distilled water) was prepared in a stainless steel cylindrical container. This percentage of wheat starch suspension produces suitable final gels which are not too rigid or too weak for instrumental texture measurement providing enough reproducibility. Then the container was placed in a water bath set at 95 °C and a mixer (RZR 2102 Control, Heidolph, Germany) with digital speed control was used to stir the starch suspensions at different mixing speeds, 15, 150 and 350 rpm and heating times, 10, 30, and 45 min. An aluminum lid was used to avoid water evaporation during mixing. A schematic representation of sample preparation unit is shown in Fig. 1. After preparing the starch pastes, they were poured into Plexiglass cylindrical moulds with 1 cm height and 2 cm diameter, covered with a glass plate to avoid moisture loss and kept at 4 °C overnight. These gels were then used for further experiments.

2.2.1. Textural properties of starch gels

A Texture Analyzer (Stable Microsystems, TA-XT2i, Surrey, England) was used to measure the force–time curves. Texture profile analysis test was performed on all gels. The gels were compressed with a cylindrical probe (diameter = 4 cm) at a test speed of 0.25 mm/s and a trigger force of 3.0 g. The deformation level was 25% of original sample height and the gels were compressed twice. Hardness (height of first peak), springiness (ratio between recovered height after the first compression and the original gel height), cohesiveness (the ratio of the area under the second peak to the area under the first peak), work (the area under force versus time until maximum force), gumminess (hardness multiplied by cohesiveness), chewiness (cohesiveness multiplied by springiness multiplied by gumminess) and gradient were determined using the Texture Exponent Lite software supplied by the manufacturer (Sandhu and Singh, 2007; Mandala et al., 2007; Huang et al., 2007).

2.2.2. Stress relaxation behavior

The starch gels prepared according to Section 2.2 were compressed by 25% with a 4 cm aluminum cylindrical probe at a speed of 2.00 mm/s. The compression level was kept constant for 120 s during which the force was recorded by the Texture Analyzer. To determine textural components the generalized Maxwell model was then used to analyze stress relaxation data. This model can be written as follows:

$$E(t) = E_e + \sum_{i=1}^{n} E_i \exp\left(-\frac{t}{\tau_i}\right) \quad (1)$$

where $E(t)$ is the modulus decaying curve determined from experiments, t is the experimental decay time, τ_i is the relaxation time of the i-th Maxwell element, and E_e represents the equilibrium or residual modulus at the fully decayed state, that is, when all relaxable stress is fully relaxed (Azizi and Farahnaky, 2013; Campus et al., 2010).

Data were fitted to Maxwell model by MATLAB 7 software (The MathWorks, Inc., USA), using curve fitting toolbox and Trust-Region algorithm. The degree of fit was judged by R^2 coefficient computed by MATLAB software.

2.2.3. Cold-water viscosity of starch gels

First the prepared starch pastes (Section 2.2) were poured into aluminum plates, The gels were then frozen in a freezer set at −18 °C and freeze-dried in a freeze dryer (DENA VACCUM, Iran) operating at 7×10^{-2} mbar or below. Afterward, the dried samples were milled and sifted with a uniform sieve size of 120 mesh to powders of similar particle size. Then cold-water viscosity of the wheat starch gels was determined using a Rapid Visco Analyzer (Starch Master2, Perten, Australia). An aliquot amount (3.00 g, dry basis) of the resultant powders were added to 25.00 g distilled water and mixed in a RVA canister. The samples were run in the RVA where they were mixed at 160 rpm (using the RVA paddle)

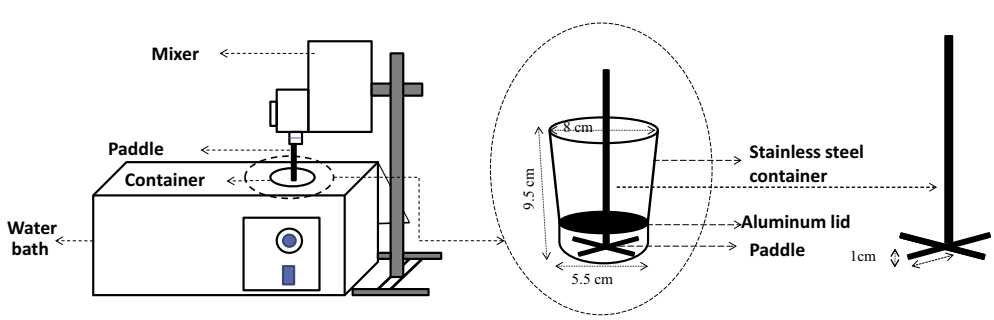

Fig. 1. Schematic representation for preparation of starch paste.

Download English Version:

https://daneshyari.com/en/article/223097

Download Persian Version:

https://daneshyari.com/article/223097

Daneshyari.com