Polymer Testing 54 (2016) 40–47

Contents lists available at ScienceDirect

Polymer Testing

journal homepage: www.elsevier.com/locate/polytest

Material behaviour

Effect of processing on the environmental stress cracking resistance of high-impact polystyrene

Luca Andena [a,*], Marta Rink [a], Claudia Marano [a], Francesco Briatico-Vangosa [a], Leonardo Castellani [b]

[a] Politecnico di Milano, Dipartimento di Chimica, Materiali e Ingegneria Chimica "Giulio Natta", Piazza L. Da Vinci, 32, Milano Italy
[b] Versalis SpA, Basic Chemicals & Plastics Research Center, Via G. Taliercio, 14, Mantova Italy

ARTICLE INFO

Article history:
Received 20 April 2016
Accepted 18 June 2016
Available online 23 June 2016

Keywords:
Polystyrene
Environmental stress cracking
Processing
Fracture

ABSTRACT

Processing conditions have a strong effect on the final mechanical properties of products made of polymeric materials. Relevant phenomena most commonly include thermal stresses, physical ageing, frozen-in strains and molecular orientation. In this work, two different high-impact polystyrenes, processed by thermoforming, were considered: a "standard" one and a grade specifically resistant to Environmental Stress Cracking (ESC). The main effect induced by thermoforming was molecular orientation. The local degree of orientation was measured on a thermoformed product and its effect on the material ESC behavior in sunflower oil was studied. A Fracture Mechanics approach was applied to evaluate the fracture resistance of the two materials. Results show that a higher degree of orientation increases the fracture resistance in air but has no effect on the (expectedly lower) resistance in the active oil environment.

© 2016 Elsevier Ltd. All rights reserved.

1. Introduction

Polymeric materials in the form of powder or pellets can be shaped to obtain products following a complex thermo-mechanical processing history. This history strongly influences many different properties of the constituent material and, consequently, the products' actual performance. According to Struik [1], the main effects of processing are: (i) physical ageing, which is the consequence of the viscoelastic volume relaxation towards equilibrium experienced by polymers cooled below their glass transition temperature, T_g; (ii) residual thermal stresses, which originate from temperature gradients in the product when more or less rapidly cooled from the high temperatures necessary for shaping; (iii) residual strains, due to the viscoelastic nature of polymeric materials which retain memory of the stresses applied during processing; (iv) molecular orientation, induced by viscous flow at high temperatures, which becomes frozen-in during cooling. In the case of semicrystalline materials, the degree of crystallinity and the specific orientation of the crystalline phase could also be influenced by the processing conditions. All these variables exert a strong effect on the mechanical characteristics of the final products.

ESC is a well-known phenomenon by which the presence of certain substances facilitates initiation and growth of fracture in a given material, effectively reducing the levels of applied stress necessary for its occurrence [2–5]. In the presence of the said substances, even small residual stresses – otherwise unharmful – may trigger fracture and lead to the premature failure of a component.

In this research, the two themes of processing and ESC were put together. There are only a handful of studies regarding the effects of processing on ESC resistance, and often a single effect is considered: examples can be found in Refs. [6,7] for orientation on high impact polystyrene (HIPS) and crystallinity on polyethylene, respectively.

The material investigated in this work was HIPS, for which food oils are known ESC-promoting agents [2,6]. Firstly, the effects of the thermoforming process on a HIPS thermoformed product were analyzed, ascertaining their presence and their spatial distribution. In a second stage, samples were obtained directly from the thermoformed product and the material's fracture resistance was evaluated using the fracture mechanics (FM) approach, which has been previously applied by the authors to study the resistance of different polymers to Environmental Stress Cracking (ESC) [2,3], to obtain a correlation between processing effects and ESC resistance.

* Corresponding author.
E-mail address: luca.andena@polimi.it (L. Andena).

http://dx.doi.org/10.1016/j.polymertesting.2016.06.017
0142-9418/© 2016 Elsevier Ltd. All rights reserved.

2. Materials

Two different HIPS (named A and B), previously studied in Ref. [2], were investigated. HIPS-A and HIPS-B are a specifically ESC resistant and a standard grade, respectively; the former exhibits a significantly higher resistance to ESC in sunflower oil environment. ESC resistance measured with the bent strip test (ISO 22088-3 at 0.5% def. −50 min−23 °C) gives $\varepsilon_r/\varepsilon_0$% of 94 and 26 for HIPS-A and HIPS-B, respectively.

Mechanical properties (elastic modulus, yield stress, impact resistance) in air are quite similar for the two materials. Some differences are due to a larger (by about 10%) dispersed phase content for HIPS-A, which also has a larger average rubber particle size.

The two materials were supplied by Versalis SpA in the form of pellets, extruded sheets (about 4 mm thick) and a thermoformed laboratory product. Pellets were compression molded into 200 × 170 mm plates with thicknesses of 1.5 and 4 mm. The thermoformed product studied is shown schematically in Fig. 1, together with its relevant dimensions and the parts (1–5) which were cut out to test. This product, obtained starting from an extruded sheet, has an average thickness of about 1.5 mm.

3. Methods

3.1. Evaluation of processing effects

As already mentioned in the introduction, four main effects of processing may be expected. Their relative importance depends on the particular processing conditions adopted. According to the nature of each one, they were investigated on the thermoformed laboratory product and/or the extruded sheets by tracking dimensional changes following different thermal treatments, with the exception of physical ageing the presence of which was detected by performing tensile tests. Measurements of dimensional changes of parts 1–5 cut from the thermoformed product were performed by aid of a stamped ink grid with a square pattern. As an example, Fig. 2 shows two pictures of part 3 of the HIPS-B thermoformed product, taken before and after one of the thermal treatments.

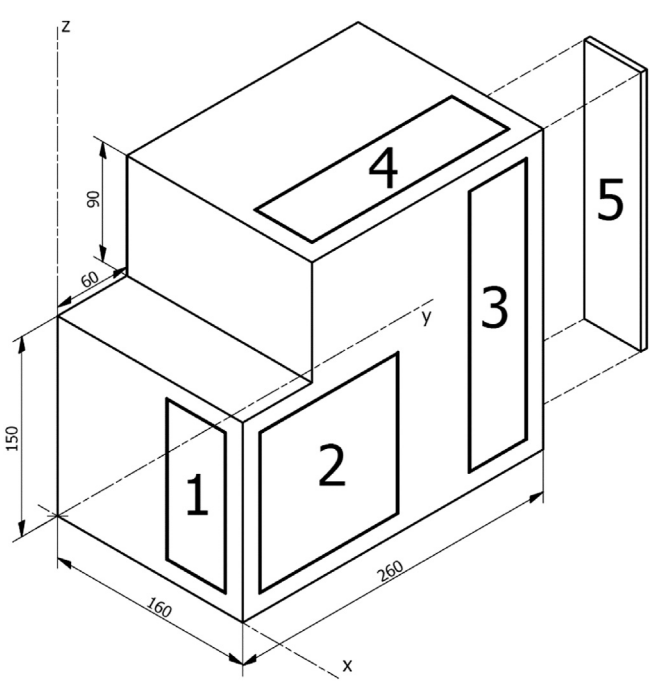

Fig. 1. Schematic of thermoformed product considered, with cut out parts 1–5 indicated (dimensions are in mm).

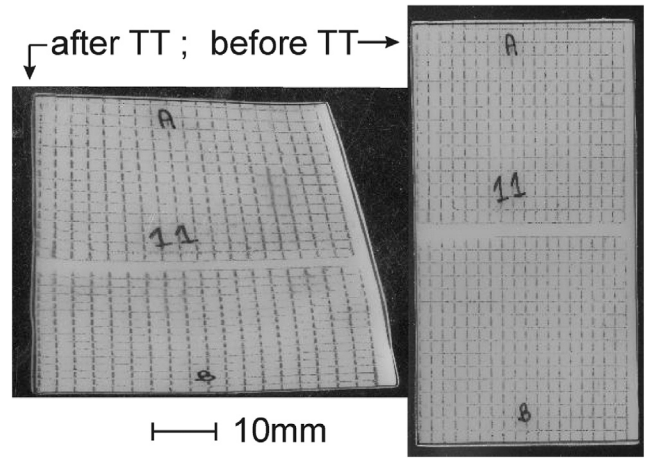

Fig. 2. Part 3 of thermoformed product, before and after the thermal treatment (TT: 1 h at 90 °C). The corresponding grid geometry distortion is visible.

3.1.1. Physical ageing

Polymeric glasses are in a non-equilibrium volumetric state; this in turn depends on the thermal history experienced by the polymer while cooling from processing to room temperatures, as well as on the amount of time elapsing thereafter, since volume evolves towards equilibrium. The effects of these volumetric changes are called physical ageing. Several mechanical properties depend on the actual volumetric state; in this work, tensile yield stress has been considered. Yield stress has been determined as the maximum in the stress-strain curves, being aware that at this value multiple crazing occurs in HIPS. It was measured on samples cut from extruded sheets (kept for several weeks at 23 °C), before and after a 1 h thermal treatment at 90 °C, which is just below the glass transition temperature of the polystyrene matrix of HIPS ($T_g \approx 100$ °C), followed by a fast cooling in air to 23 °C. Because this thermal treatment should rejuvenate the material, the samples before and after the treatment will be referred to as "aged" and "unaged samples" respectively.

Tensile tests were then performed at 23 °C on an Instron 1121 electro-mechanical dynamometer with a constant crosshead speed of 1 mm/min; strains were measured using a mechanical extensometer. Samples geometry and dimensions are shown in Fig. 3.

3.1.2. Thermal stresses

Thermal stresses are caused by temperature gradients present across the thickness of the product during cooling through the glass transition temperature. They can be removed by annealing the product close or at T_g and then slowly cooling it down to room

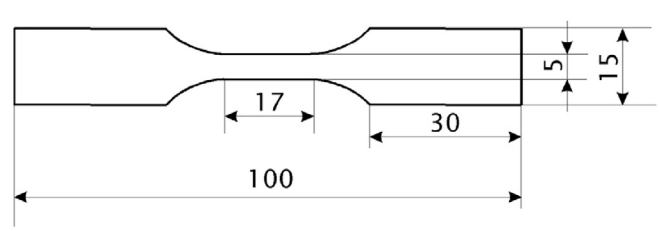

Fig. 3. Geometry of the sample used for tensile tests (dimensions are in mm).

Download English Version:

https://daneshyari.com/en/article/5205875

Download Persian Version:

https://daneshyari.com/article/5205875

Daneshyari.com