Microelectronics Reliability 57 (2016) 93–100

Contents lists available at ScienceDirect

Microelectronics Reliability

journal homepage: www.elsevier.com/locate/mr

Thermo-mechanical reliability of a multi-walled carbon nanotube-incorporated solderable isotropic conductive adhesive

Byung-Seung Yim, Jong-Min Kim *

School of Mechanical Engineering, Chung-Ang University, Seoul 156-756, Republic of Korea

ARTICLE INFO

Article history:
Received 20 August 2015
Received in revised form 25 November 2015
Accepted 9 December 2015
Available online 23 December 2015

Keywords:
Intermetallic compounds
Isotropic conductive adhesives
Low-melting-point-alloy
Multi-walled carbon nanotubes
Reliability
Wettability

ABSTRACT

Carbon nanotubes (CNTs) are considered as ideal candidates for the reinforcement of polymer composites due to their superior physical properties. In this paper, in order to investigate the influence of multi-walled carbon nanotubes (MWCNTs) on the reliability properties of solderable isotropic conductive adhesives (SICAs) with a low-melting-point alloy (LMPA), two types of SICAs (with 0.03 wt.% MWCNTs and without MWCNT) were formulated. Thermal shock (−55 to 125 °C, 1000 cycles) and high-temperature and high-humidity (85 °C, 85% RH, 1000 h) tests were conducted on these samples. The SICA assemblies with and without MWCNTs showed stable electrical reliability properties during reliability testing; this stability was due to the formation of excellent metallurgical interconnection between corresponding metallization by the molten LMPA fillers. Although the mechanical pull strength of SICA assemblies decreased after thermal aging, due to the excessive layer growth and planarization of the IMCs, the SICA with MWCNTs showed enhanced mechanical reliability properties compared with the SICA samples without MWCNTs. This improvement in performance was caused by the enhancement effect of the MWCNTs. These results demonstrate that MWCNTs within SICAs can enhance the reliability properties of SICA joints due to their outstanding physical properties.

1. Introduction

Electrically conductive adhesives (ECAs) with non-fusible organic or non-organic fillers have been widely used as an alternative to lead-free solder materials in the microelectronic packaging industry due to their potential advantages such as low processing temperature, high resolution capabilities, more flexible and simpler processing, and compatibility with non-solderable materials [1–3]. However, non-fusible filler-filled ECAs form a conduction path through the physical–mechanical contact of the conduction fillers between corresponding metallization surfaces during the curing process. Due to this conduction mechanism, the non-fusible filler-filled ECAs have critical limitations when compared with metallurgical interconnections using soldering techniques. These shortcomings include low and unstable electrical and thermal conductivities, increased contact resistance, and low impact and joint strength [4,5]. To overcome the limitations of non-fusible filler-filled ECA techniques, solderable isotropic conductive adhesives (SICAs) with a polymer matrix (with reduction capabilities) and fusible low-melting-point alloy (LMPA) fillers have been investigated [6,7]. SICAs can achieve excellent interconnection properties, such as low and stable electrical performance and high mechanical bonding strength, by the formation of metallurgical conduction path in the molten LMPA fillers.

Additionally, in previous works, we formulated SICAs that were incorporated with carbon nanotubes (CNTs) as a reinforcement material to improve the interconnection properties of SICAs. We also developed an interconnection mechanism for these materials, as shown in Fig. 1 [8, 9]. CNTs are considered to be ideal nanofiller materials for the improvement of polymer composites because of their physical properties (e.g., their novel structure, high intrinsic mechanical strength, and electrical and thermal conductivities) [10]. As can be seen in the figure, the metallurgical conduction path is formed by the flow-coalescence-wetting behaviors of molten LMPAs between the corresponding electrodes, and the simultaneous movement of the polymer composite outside of the conduction path region. At this time, the covalently bonded CNTs, with epoxides of polymer composites, moved outside of the conduction path via the polymer flow. The interconnection properties of SICAs can be enhanced compared to SICAs without CNTs due to the outstanding physical properties of CNTs within the polymer composite region.

When developing an interconnection material to apply to an electronic package device, the thermo-mechanical reliability properties of the interconnection material should be carefully considered to ensure reliable performance of the electronic packages. Electronic packages are composed out of various package materials with dissimilar coefficients of thermal expansion (CTEs). When the electronic packages are exposed to various environments, such as repetitive temperature change, high humidity by power consumption, or the external environment, high interfacial stresses can be generated in the package joints

* Corresponding author at: Chung-Ang University, 221 Heusksuk-dong, Dongjak-gu, Seoul 156-756, Republic of Korea.
E-mail address: 0326kjm@cau.ac.kr (J.-M. Kim).

http://dx.doi.org/10.1016/j.microrel.2015.12.014
0026-2714/

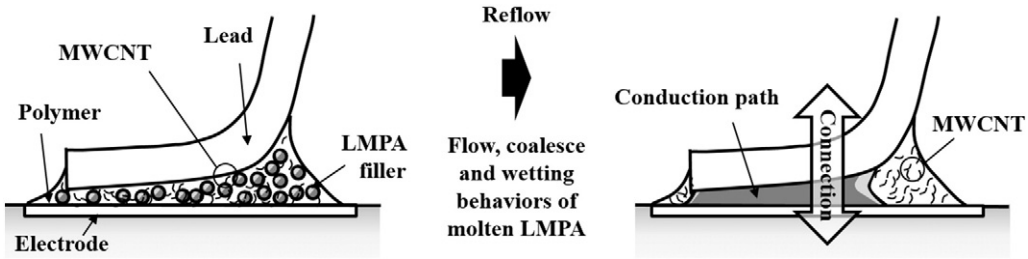

Fig. 1. Schematic of the interconnection mechanism using SICAs with LMPA filler and MWCNTs.

due to the CTE mismatch between the package materials [11]. Most fatigue failures can be attributed to thermo-mechanical stresses in the package joints [12]. If these stresses exceed the critical value, interfacial delamination and fracture will occur, and the functionality of the system will be destroyed [13].

In this study, to examine the influence of multi-walled carbon nanotubes (MWCNTs) on the thermo-mechanical reliability properties of SICAs, two types of SICAs (with and without MWCNTs) were prepared. Thermal shock (TS) and high-temperature and high-humidity (HTHH) tests were performed. The electrical and mechanical reliability properties of SICA assemblies were investigated and compared during reliability testing. In addition, the interfacial microstructure and fracture surface were analyzed.

2. Experimental

2.1. Materials

For the formulation of SICAs, diglycidyl ether of bisphenol A (DGEBA, Kukdo Chemical, Korea) was used as the base resin. 4,4′-diaminodiphenylmethane (DDM, TCI Korea Co., Korea) and boron trifluoro-mono-ethylamine (BF_3MEA, Wako Pure Chemical, Japan) were used as the curing agent and catalyst, respectively. Carboxylic acid (Aldrich Chem. Co., USA) was used as the reductant to eliminate the oxide layer on the LMPA and metallization surface. The LMPA filler (Sn-58Bi solder powder, melting temperature of 138 °C), which had a diameter of 45 μm, was obtained from Duksan Hi-Metal Co. The MWCNTs (Nanotech Co. Ltd., Korea) used in this study had a diameter range of 15–40 nm and a length range of 30–50 μm (purity >95%). The components of the SICAs used in this study are shown in Table 1. For the reliability test, QFP (QFP44T40-3.2, Topline Co., USA) with a 1.0 mm lead pitch Sn-plated Cu lead was used. The dimensions of the QFP body were 14 × 14 × 2.7 mm, and the number of I/O leads was 44. Also, the dimensions of the printed circuit board (PCB) were 32 × 32 × 1.0 mm, and the thickness of the Cu electrode was 18 μm. To measure the electrical reliability properties of SICA joints during the reliability tests, daisy-chains were patterned at the QFP and PCB. As shown in Fig. 2, two types of daisy-chains were used; one is a series circuit type daisy-chain connecting the all circuit to measure the total electrical resistance shift of assemblies during reliability tests, and the other is series circuit connecting each individual line to examine unusual resistance increases in single or multiple lines.

Table 1
Components of SICAs formulations in this study.

Compositions	SICA 1	SICA 2
Resin	DGEBA	
Curing agent	DDM	
Catalyst	BF_3MEA	
Reductant	Carboxylic acid	
LMPA	Sn-58Bi (φ 45 μm, 50 vol.%)	
MWCNT	0 wt.%	0.03 wt.%

2.2. Test assemblies preparation

To investigate the influence of the incorporated MWCNTs on the reliability properties of SICAs, two types of SICAs were formulated: without MWCNTs (SICA 1) and with MWCNTs (SICA 2, MWCNT concentration: 0.03 wt.%). For SICA 2, the MWCNTs were chemically functionalized by an acid treatment using a solution of sulfuric acid (H_2SO_4) and nitric acid (HNO_3) (volume ratio of 3:2) [14]; this was done to ensure proper homogeneity of the MWCNTs in the polymer composite. Pristine MWCNTs (0.2 g) were mixed into the solution, and the mixed solution was stirred at 70 °C for 24 h. After the reaction, the functionalized MWCNTs were repeatedly washed using deionized water and dried in a vacuum oven at 80 °C for 12 h. To disperse the MWCNTs in the polymer composite, the appropriate amount of functionalized MWCNTs was mixed in acetone, stirred for 2 h, and sonicated for 1 h in a water bath. This dispersion was then mixed with DGEBA to give a concentration of 0.03 wt.%. This mixture was then stirred for 4 h and sonicated at 60 °C for 1 h to achieve the proper homogeneity. The mixture was then placed in a convection oven at 80 °C for 6 h to evaporate the ethanol, and the residual ethanol and air bubbles were eliminated in a vacuum oven at room temperature for 5 h. After ethanol removal was completed, stoichiometric amounts of additives (including DDM, BF_3MEA, and carboxylic acid) were sequentially mixed into the mixture. LMPA filler (40 vol.%) was then uniformly dispersed into the formulated polymer composite. Finally, any residual bubbles were eliminated in a vacuum oven.

After SICA formulation was completed, the QFP interconnection using SICAs with and without MWCNT was performed. A metal mask with a thickness of 100 μm was aligned on the cleaned PCB and the formulated SICA was uniformly deposited onto the exposed Cu metallization using the squeegee method. The QFP was then aligned and

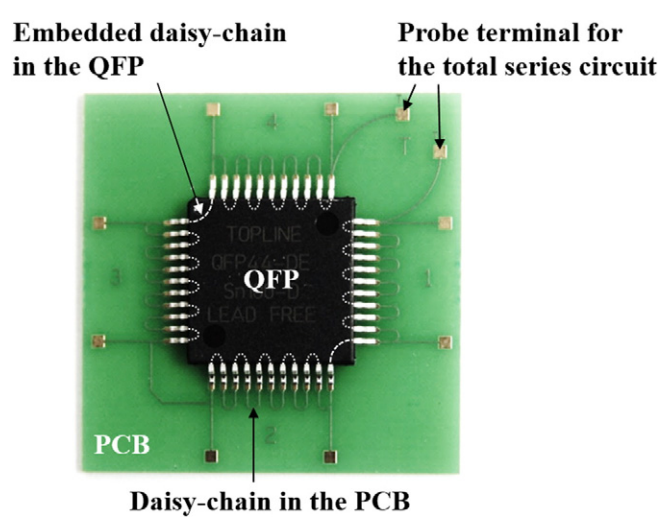

Fig. 2. Configuration of daisy-chain structure in the test chip and PCB board for electrical resistance measurement.