Renewable and Sustainable Energy Reviews 72 (2017) 1019–1032

Contents lists available at ScienceDirect

Renewable and Sustainable Energy Reviews

journal homepage: www.elsevier.com/locate/rser

Economic assessment of concentrated solar power technologies: A review

Alexander W. Dowling, Tian Zheng, Victor M. Zavala*

Department of Chemical and Biological Engineering, University of Wisconsin-Madison, 1415 Engineering Dr, Madison, WI 53706, USA

ARTICLE INFO

Keywords:
Concentrated solar power
Energy storage
Economics
Levelized cost of electricity
Dynamics
Flexibility

ABSTRACT

This paper surveys economic assessments of concentrated solar power (CSP) technologies and finds two dominant assessment methods. A majority of studies reported in the literature are based on the levelized cost of electricity (LCOE), while a small subset of studies consider time-varying meteorological and electricity market conditions. Several studies argue that LCOE undervalues dynamic flexibility provided by thermal energy storage and does not consider revenue opportunities provided by electricity markets at different time scales. As a result, some studies find that both LCOE and revenue can in fact be conflicting metrics for certain designs and market conditions. This review finds strong variations in LCOE and revenue estimates in the literature. As comparisons between CSP and other generation technologies (e.g., fossil, wind, and photovoltaic) are dictated by the chosen economic metric, it is imperative that policy and investment decisions should carefully consider time-varying effects and flexibility. Finally, research directions are proposed to increasing the fidelity of economic assessments and to mitigate discrepancies.

1. Introductory remarks

Concentrated solar power (CSP) technologies harness thermal energy from the sun to drive a thermodynamic cycle. Thermal energy storage (TES) is realized through the addition of tanks, which allows CSP systems to generate electricity at times of little or no solar irradiance. This includes operating 24-h a day (baseline generation) or adjusting electricity generation during times of increased demand and high prices. The economics of CSP systems depend on the selected operating mode, regional subsidies, solar availability, and market prices for electricity and electricity services. This paper reviews different techno-economic methodologies and assessments for CSP systems, with an emphasis on the value of flexibility provided by TES and other design considerations.

1.1. CSP technologies

There are four different types of solar collector designs: parabolic troughs, heliostats (for power towers), linear Fresnel lenses, and dish receivers. The first two are the most prominent for large installations. In parabolic trough systems, shown in Fig. 1, heat is transferred from the solar collectors (loop 1) to the thermodynamic cycle (loop 2). Optionally, the first loop may contain hot and warm storage (thermal storage) tanks for the heat transfer fluid or a supplemental fossil fuel boiler or both. In the second loop, the input heat is used to generate high pressure steam (or heat another working fluid such as an organic mixture), which is expanded in turbines to generated electrical power. In power tower systems, solar energy is reflected from a field of mirrors (heliostats) onto a central receiver (the power tower). This design allows for higher levels of concentrations and higher working fluid temperatures, and thus higher thermodynamic cycle efficiencies. Optionally, both parabolic troughs and power tower systems may directly heat high pressure steam [1–3] or another working fluid as part of a Brayton cycle [4]. The selection of heat transfer fluid and storage system depends on operating temperatures. Synthetic oils and similar heat transfer fluids experience rapid degradation at temperatures above 400 °C [5–7], and thus are typically found in parabolic trough systems only. In contrast, molten salts are suitable for higher temperatures, but solidify at ambient conditions and this complicates operations. The typical operating conditions and cycle efficiencies for these two categories of CSP systems are given in Table 1. Additional CSP process details are provided in several review papers [7–12].

Several aspects of CSP technologies provide flexibility at multiple timescales. For example, TES enables CSP systems to delay electricity generation to subsequent hours and days. Similar, the steam cycle provides ramping flexibility, around 3% per minute for generic Rankine cycles, that allows for minute-by-minute adjustments. Electric heaters for electricity buy-back [14,15] provide flexibility on the order of seconds. CSP systems may exploit this spectrum of flexibility by transacting energy and energy services on multiple timescales, resulting in a diverse stream of revenues.

* Corresponding author.
E-mail addresses: adowling2@wisc.edu (A.W. Dowling), victor.zavala@wisc.edu (V.M. Zavala).

http://dx.doi.org/10.1016/j.rser.2017.01.006
Received 4 June 2016; Received in revised form 5 November 2016; Accepted 3 January 2017
1364-0321/

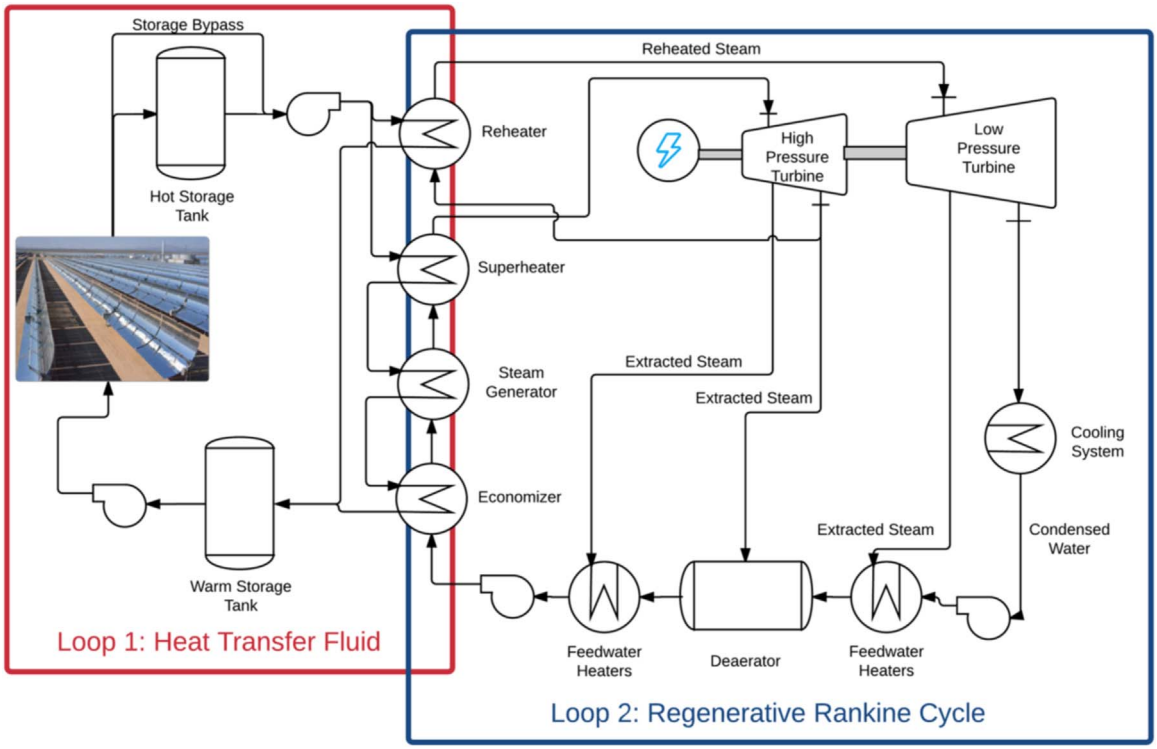

Fig. 1. Parabolic trough CSP systems contain two interconnected loops. In the first loop, heat transfer fluid (e.g., Dowtherm A) is circulated through the solar collectors, where it is heated, and either sent to the hot storage tank or immediately used to generate steam. After transferring heat to the loop 2, the cooled heat transfer fluid is sent to the warm storage tank. The second loop is a standard regenerative Rankine cycle, where the economizer, steam generator, superheater, and reheater are heated with the heat transfer fluid. Other standard steam cycle equipment, including a condenser, feedwater heaters, and deaerator are also used.

1.2. Economic assessment methods

Two types of economic assessment methodologies are popular for CSP technologies. The simplest and most common economic metric is **Levelized Cost of Electricity** (LCOE), defined as the required revenue (dollars per unit energy) needed to recover operating and investment costs for a specific generator design over a specified length of time. Joskow [16] succinctly demonstrated that LCOE analysis does not capture the time-varying value of electricity. In particular, the author compared dispatchable (90% capacity factor) and intermittent (30% capacity factor) energy sources in a two-tier electricity market (on- and off-peak prices). Despite the near identical LCOEs, intermittent systems presented negative profits (losses of $42 k to $45k per MW_e per year) when most of the energy is provided during off-peak. This represents wind turbines producing electricity at night. In contrast, the dispatchable source was moderately profitable ($8 k per MW_e per year) and the intermittent source was highly profitable ($87 k per MW_e per year) when all of the energy is supplied during on-peak hours. To test if this critique is valid for real systems, we analyzed California real-time energy market prices from 2015 (http://oasis.caiso.com/) and found similar results: shifting 10 MW_e of generation from the average price (30 $/MWh) to the 1% most extreme prices (97 to 1621 $/MWh) yields additional revenues of $400,000/yr. This represents a 6% increase in revenue for a hypothetical 50 MW_e CSP system operating at 50% capacity factor and selling energy at the average market price. Several authors have expressed criticisms of LCOE comparisons and have demonstrated that certain CSP design modifications that increase LCOE also lead to short pay-off periods when the time-varying value of electricity is taken into account [14,15].

Alternately, net present value (NPV), return on investment (ROI), and similar financial metrics are computed by estimating revenues from historical electricity prices, government subsidies, and meteorological data. This more accurately captures the time-varying value of delivered energy and offers a more holistic analysis for potential investors. A few studies also consider supplemental revenue from ancillary service provisions, such as regulation and spinning reserves, available to CSP generators with TES. For example, Madaeni et al. [17] determined that providing spinning reserves increased CSP annual revenues by 17% compared to the case in which only energy arbitrage is performed (i.e., generation is adjusted based on time-varying energy prices). Based on data from the California markets, we determine a hypothetical CSP system providing 10 MW_e of regulation capacity for all hours of 2015 would have received $500,000/yr in regulation capacity payments alone. The dispatchability of CSP systems with regard to energy and ancillary services depend on the size of the TES system. Thus the flexibility from TES is undervalued in LCOE analyses.

Revenues estimates from time-varying meteorological and price data depend on the selected operating policy and CSP design decisions

Table 1
Comparison of CSP technologies.

Collector Type	Heat Transfer Fluid	Max. Temp.	Solar-to-Electricity Efficiency
Parabolic Trough	Synthetic Oil	480 °C [5,6]; 400 °C [7]	13.6% [13]; 18% [5]; 16.1% [6]; 14% [7]
Parabolic Trough	Dowtherm A	400 °C [10]	11–16% [10]
Parabolic Trough	Direct Steam Gen.	400 °C [1,2]	8–12% [1]; 10–15% [2]
Power Tower	Molten Salt	650 °C [10]; 565 °C [7]	7–20% [10]; 14% [7]
Power Tower	Direct Steam Gen.	600 °C [1]; 680 °C [5]; 565 °C [7]	12–18% [1];13.8% [5]; 13.6% [7]