Composite Structures 200 (2018) 532–539

Contents lists available at ScienceDirect

Composite Structures

journal homepage: www.elsevier.com/locate/compstruct

Influence of reinforcement viscous properties on reliability of existing structures strengthened with externally bonded composites

V.P. Berardi*, L. Feo, G. Mancusi, M. De Piano

Department of Civil Engineering, University of Salerno, Via Giovanni Paolo II 132, 84084 Fisciano, SA, Italy

ARTICLE INFO

Keywords:
Structural strengthening
Analytical modelling
FRP
Rheological properties
Creep
Stress transfer

ABSTRACT

The time-depending stress transfer in existing structures strengthened with externally bonded fiber reinforced polymer (FRP) systems, due to viscous effects of reinforcement, is analysed in this paper. A new modelling strategy for assessing the long-term response of these composite beams was developed, by assembling two one-dimensional components (existing structural element and external strengthening) and accounting for thin-walled sectional geometry of FRPs. Several numerical experiments dealing with FRP laminates-reinforced concrete (RC) composite beams were performed and the corresponding results were compared with the predictions of the Effective Modulus Method (EM). A relevant stress redistribution between the components of the examined strengthened structures was observed.

1. Introduction

The strengthening of existing structures with externally epoxy-bonded fiber reinforced polymer (FRP) composites is becoming an increasingly common method of structural rehabilitation of reinforced concrete (RC), steel, masonry and timber structures.

One of the most relevant topics is represented by the reliability over time of this technique under rheological effects of FRPs, because their phases (matrix and fibres) may be highly sensitive to creep phenomena.

A similar problem occurs in the case of the steel-concrete composite structures, accounting for creep phenomena in the concrete component [1,2].

The experimental and theoretical studies available in literature on composites rheology, performed in the industrial, aeronautic or naval field [3–12] and in the context of civil engineering [13–18], show the relevance of FRPs viscous flow. Moreover, several investigations on composites systems also highlight significant stress variations over time due to creep behavior of materials based on polymers [19–24].

International guidelines and technical codes introduce useful stress limitations in order to assess the safety of composite structures under viscous effects [25–28]. These simplified verifications may lead to an oversizing of structural reinforcement in the design process.

A similar result of FRP oversizing may be obtained via the Effective Modulus (EM) method [29], which consists of a transformation of a linear viscoelastic problem into a linear elastostatic one, under the simplified assumption of constant stress state in viscous materials during the creep flow. This hypothesis does not allow to take into account the relevant stress transfer from the FRP to the concrete core which generally reduces the viscous effects over time.

Consequently, it is interesting to study in depth the effects of these stress variations in order to get a more accurate prediction of the long-term behavior of these composite structures.

In this paper, a modelling strategy capable to evaluate the influence of rheological properties of composite materials on the mechanical behavior of strengthened existing structures is presented.

The approach is capable to evaluate the stress migration from FRP to existing structural element, also accounting for the thin-walled sectional geometry of composite. Some benchmark cases of FRP laminates-RC composite beams are analyzed and discussed in terms of strain and stress variation over time.

The presented verification strategy offers a useful and smart tool for the reliability assessment over time of existing structures strengthened in flexure and/or in shear with composite laminates.

2. Modelling strategy

The proposed modelling strategy is based on a refinement of the mechanical model of strengthened beam proposed in [30–32], here extended to viscoelastic transversely isotropic materials, and is capable to account the progressive decrease of the FRP stress state over time and the thin walled sectional geometry.

* Corresponding author.
E-mail addresses: berardi@unisa.it (V.P. Berardi), l.feo@unisa.it (L. Feo), g.mancusi@unisa.it (G. Mancusi), mdepiano@unisa.it (M. De Piano).

https://doi.org/10.1016/j.compstruct.2018.05.111
Received 19 March 2018; Received in revised form 23 May 2018; Accepted 28 May 2018
Available online 02 June 2018
0263-8223/

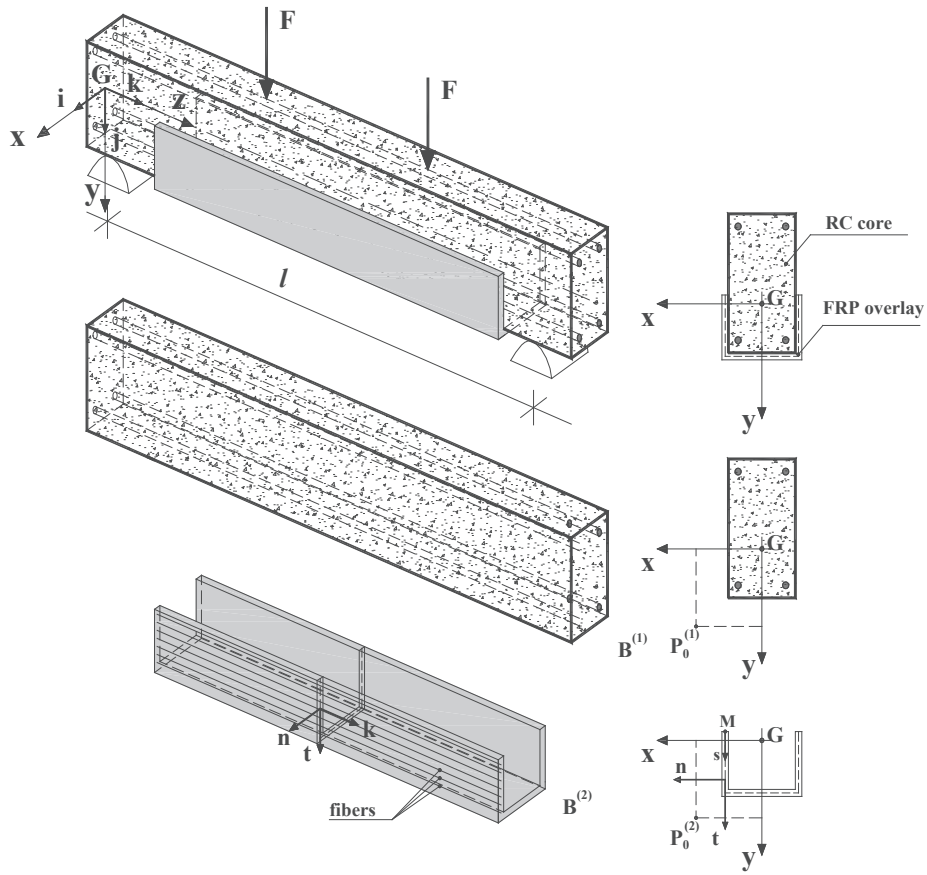

Fig. 1. RC beam strengthened both in flexure ad in shear with a unidirectional FRP composite.

2.1. Kinematics

Let assume a FRP laminate-reinforced concrete (RC) composite beam, as the assembly of two one-dimensional components corresponding to the concrete core ($B^{(1)}$) and to the FRP reinforcement ($B^{(2)}$) (Fig. 1).

The concrete core behaves as a Timoshenko's beam and, then, its kinematics consists of a rigid transformation of the cross-section in its own plane and out of the same plane.

The corresponding displacement components $u^{(1)}$, $v^{(1)}$, $w^{(1)}$ of a generic point P along the coordinate x, y and z axes are expressed as follows:

$$u^{(1)}(y, z) = u_0^{(1)}(z) - \theta^{(1)}(z)\cdot(y - y_0^{(1)}), \tag{1a}$$

$$v^{(1)}(x, z) = v_0^{(1)}(z) + \theta^{(1)}(z)\cdot(x - x_0^{(1)}), \tag{1b}$$

$$w^{(1)}(x, y, z) = w_0^{(1)}(z) + \varphi^{(1)}(z)\cdot(y - y_0^{(1)}) - \psi^{(1)}(z)\cdot(x - x_0^{(1)}), \tag{1c}$$

being

- $x_0^{(1)}$, $y_0^{(1)}$ the coordinates of a point $P_0^{(1)}$ of the x-y plane assumed as pole of the rigid transformation of the generic cross-section in its own plane;
- $u_0^{(1)}$, $v_0^{(1)}$, $w_0^{(1)}$ the displacement components of $P_0^{(1)}$;
- $\varphi^{(1)}$, $\psi^{(1)}$ the rigid rotations of the cross-section about x and y axes, respectively;
- $\theta^{(1)}$ the twisting rotation about the pole $P_0^{(1)}$.

The FRP overlay is modelled by means of the thin-walled beam model proposed in [31], based on a generalization of the Vlasov's theory, that consists of a rigid transformation of the cross-section in its own plane and of a warping out of the same plane.

The corresponding displacement components $u^{(2)}$, $v^{(2)}$, $w^{(2)}$ of a generic point P along the coordinate x, y and z axes are reported as follows:

$$u^{(2)}(s, z) = u_o^{(2)}(z) - \theta^{(2)}(z)\cdot(y(s) - y_o^{(2)}), \tag{2a}$$

$$v^{(2)}(s, z) = v_o^{(2)}(z) + \theta^{(2)}(z)\cdot(x(s) - x_o^{(2)}), \tag{2b}$$

$$w^{(2)}(s, z) = w_o^{(2)}(z) + \varphi^{(2)}(z)\cdot y(s) - \psi^{(2)}(z)\cdot x(s) - \dot{\theta}^{(2)}(z)\cdot\omega(s) + \gamma_i(z)\cdot\int_M^P f_i^*(s)ds, \tag{2c}$$

where

- $x_0^{(2)}$, $y_0^{(2)}$ correspond to the coordinates of a point $P_0^{(2)}$ of the x-y plane assumed as pole of the rigid transformation of the generic cross-section in its own plane;
- $u_0^{(2)}$, $v_0^{(2)}$, $w_0^{(2)}$ are the displacement components of $P_0^{(2)}$;
- $\varphi^{(2)}$, $\psi^{(2)}$ represent the rigid rotations of the cross-section about x and y axes, respectively;
- $\theta^{(2)}$ is the twisting rotation about the pole $P_0^{(2)}$;
- $w_o^{(2)} = w_M - \phi^{(2)}\cdot y_M + \psi^{(2)}\cdot x_M$;
- $M \equiv (x_M, y_M)$ is defined as the origin of the curvilinear coordinate s;
- $w_M = w^{(2)}(0, z)$
- ω is the sectorial area in the Vlasov's theory;
- $\gamma_i(z)$ $i \in \{1, 2, ..., N_s\}$ are the shear generalized displacement components;
- $f_i^*(s)$ are the shear shape functions given in [31].

The FRP is also considered to be bonded to the core via continuous bilateral elastic springs (penalty approach), arranged along the directions n, t, k of the cartesian local reference system (Fig. 2). The spring reactions give an approximation of the interfacial stresses.