Optical Fiber Technology 43 (2018) 145–152

Contents lists available at ScienceDirect

Optical Fiber Technology

journal homepage: www.elsevier.com/locate/yofte

Regular Articles

Fiber Bragg grating based temperature profiling in ferromagnetic nanoparticles-enhanced radiofrequency ablation

Madina Jelbuldina[a,b], Alina V. Korobeinyk[c,d], Sanzhar Korganbayev[a,b], Vassilis J. Inglezakis[c], Daniele Tosi[a,b,*]

[a] Nazarbayev University, Department of Electrical and Electronic Engineering, School of Engineering, 53 Kabanbay Batyr, Astana 010000, Kazakhstan
[b] National Laboratory Astana, Laboratory of Biosensors and Bioinstruments, 53 Kabanbay Batyr, Astana 010000, Kazakhstan
[c] Nazarbayev University, Environmental Science & Technology Group (ESTg), Chemical Engineering Department, School of Engineering, 53 Kabanbay Batyr, Astana 010000, Kazakhstan
[d] O.O. Chuiko Institute of Surface Chemistry of NAS of Ukraine, Kyiv 03164, Ukraine

ARTICLE INFO

Keywords:
Fiber optic sensors (FOS)
Fiber Bragg grating (FBG)
Temperature monitoring
Radiofrequency ablation
Ferromagnetic nanoparticles

ABSTRACT

In this work, we report the real-time temperature profiling performed with a fiber Bragg grating (FBG) sensing system, applied to a ferromagnetic nanoparticles (NP)-enhanced radiofrequency ablation (RFA) for interventional cancer care. A minimally invasive RFA setup has been prepared and applied *ex vivo* on a liver phantom; NPs (with concentrations of 5 and 10 mg/mL) have been synthesized and injected within the tissue prior to ablation, in order to facilitate the heat distribution to the peripheral sides of the treated tissue. A network of 15 FBG sensors has been deployed *in situ* in order to detect the parenchymal temperature distribution and estimate the thermal profiles in real time during the ablation, highlighting the impact of the NPs on the RFA mechanism. The results confirm that NP-enhanced ablation with 5 mg/mL density shows a better heat penetration that a standard RFA achieving an almost double-sized lesion, while a higher density (10 mg/mL) does not improve the heat distribution. Thermal data are reported highlighting both spatial and temporal gradients, evaluating the capability of NPs to deliver sufficient heating to the peripheral sides of the tumor borders.

1. Introduction

Radiofrequency ablation (RFA), pioneered in the late 1990′s, [1–3] is rapidly emerging as a medical procedure for minimally invasive interventional cancer care. RFA is applied in liver [4,5] and kidney [6] tumors, as well as an electrical cauterization method [7]. From a clinical standpoint, the rationale for RFA over traditional methods lays within the interventional efficiency and invasiveness [4]. On one side, compared to surgical resection, RFA is a minimally invasive treatment, which is usually administered as an outpatient procedure and requires a local anaesthesia; it also allows repeated treatments, useful to contrast cancer relapse. On the other side, RFA is a selective treatment as it confines the treatment to the region surrounding the applicator, without damaging the healthy tissues.

In RFA, such as in thermal ablation procedures, the principle of operation relies on heating the cells of a tumor, previously diagnosed and localized, over their damage threshold. As demonstrated in previous works [8,9] temperatures higher than 42–44 °C are cytotoxic, while the exposure to 52 °C for one minute is considered a reference for successful thermal dosimetry. At 60 °C proteins coagulate nearly instantaneously, and this is considered as the threshold for successful cancer cells mortality in fast ablation phenomena such as the results presented in this work. In RFA, the heat field is generated in the tumor by means of the differential of electrical potential induced between an active electrode, which is shaped as a minimally invasive percutaneous metallic applicator positioned via ultrasound guiding to the center of the tumor [1,4], and a passive electrode placed in a neutral point (patient's spine). The tissue, having typical impedance 60–120 Ω at room temperature, acts as a load that dissipates the electrical power on the active part of the electrode; the surrounding parts of the tissue are then progressively heated following the heat transfer equations [10].

RFA is successfully applied to small and mid-sized tumors [9,11]. In order to extend it to the minimally invasive treatment of larger tumors it is necessary to solve its physical and technological challenges. The major limitation is given by the lack of temperature detection: in order to estimate the size of treated tissue, it is necessary to achieve a dense thermal profiling *in situ*, which consists of the measurement of temperature in several points. Commercial RFA applicators make use of

* Corresponding author at: Nazarbayev University, Department of Electrical and Electronic Engineering, School of Engineering, 53 Kabanbay Batyr, Astana 010000, Kazakhstan.
E-mail address: daniele.tosi@nu.edu.kz (D. Tosi).

https://doi.org/10.1016/j.yofte.2018.05.004
Received 3 April 2018; Received in revised form 24 April 2018; Accepted 6 May 2018
Available online 12 May 2018
1068-5200/

electrical thermocouples (TCs) [12,13]. However, TC probes measure the temperature only on the tip(s) of the applicator [13] or axisymmetrically in multiple points, where the temperature usually exceeds 100 °C, rather than on the peripheral sides of the tumor where it is necessary to estimate whether the damage threshold has occurred. The positioning of the TCs is also hampered by the design of the catheter itself which inhibits a measurement along a single axis. An elegant and effective solution is the use of fiber optic sensors based on fiber Bragg gratings (FBGs), which allow a spatially resolved temperature measurement. The measurement of temperature distribution through inline FBG array has been proposed by Tosi et al. in 2014 [14]. A more recent work of Palumbo et al. [15] has demonstrated the use of a series of 5 FBG sensors in a 4-tip RFA cauterizer [15]. Compared to thermocouples and to imaging [16], FBG sensors have crucial advantages for this application: minimally invasive form factor and light weight, immunity to electromagnetic field (including the field radiated on the RFA tip), quasi-instantaneous response even when placed in a micro-catheter [17,18] biocompatibility in compliance to ISO standard [19], and possibility to use time/wavelength-division multiplexing to increase the number of sensing points with few fibers [14]. In alternative to FBGs, distributed optical fiber sensors based on optical backscatter reflectometry [20] and chirped fiber Bragg grating (CFBG) [21] have been used to increase the spatial resolution; these technologies however operate as a single channel sensor, while FBG sensors allow operating as an array of sensors, therefore enabling the possibility of measuring temperature on a plane rather than in a single axial direction.

An equally impactful limitation of RFA is the abrupt change of impedance experienced by the tissue when its water constituents vaporize [14,10]. As the temperature in the ablation peak approaches the ~100 °C ebullience point, the presence of vapour causes a steep rise of impedance, interrupting the ablation procedures. Clinical RFA generators mount an impedance meter and operate in safe mode, meaning that the RF power is discontinued when the tissue impedance overcomes a 300–1000 Ω threshold. Overall, this effect limits the capacity of RFA to reach the outer borders of tumors, hence limiting the size of ablated tissue. In order to contrast this limitation, Tamarov et al. reported the use of Si nanoparticles (NP) [22], while Gannon et al. proposed Au nanorods to mediate the ablation process [23]. An alternative approach has been carried out by Ashokan et al. reported RFA mitigated by a biomineral agent [24], while Yan et al. proposed peptide mediators [25]. Overall, the use of NP introduced *in situ* within the tissue alters the electrical impedance and the heat conductivity of the tissue, depending on their density and position [22]. Previous studies [23,26] show that NP-mediated ablation has a better capacity of delivering heat to the peripheral sides of the tumors. Some recent works demonstrate the possibility of measuring thermal pattern in NP-mediated thermal ablation using fiber optic sensors [27–29].

In this work, we aim at tackling technological challenges of RFA by proposing a concept of ferromagnetic nanoparticles-enhanced RFA with *in-situ* thermal profiling. Magnetic nanoparticles (MNPs) for medical application are getting great attention of researchers. Since MNPs magnetic properties are not present in most biological materials they can be applied in medical applications such as separation, magnetic labelling, immunoassays, drug delivery, thermal marking of tumor and hyperthermia cancer treatment [30–33]. An application of MNPs in the RFA hyperthermia, a method in which tumor cells are treated with the heat generated from MNPs in a high frequency field, is governed by Néel relaxation, Brownian relaxation, and a hysteresis loss mechanism [34] and the heating mechanism is expected to depend largely on particle size [35]. Important results have been achieved by the European project RADIOMAG [36–37], that investigates the effect of MNP in magnetic hyperthermia. Small particles (10–40 nm) are preferred in hyperthermia application due to their ability to produce significant level of heating [38]. Since the size of therapeutic MNPs is < 100 nm which increases its specific surface area, decreases the sedimentation rate and improves the diffusion rate, the confirmation of biocompatibility for various MNPs in both *in vitro* and *in vivo* [39–41] is vitally important for hyperthermia treatment.

A network of 15 FBG sensors, covering an area of 4.5 cm^2, allows detecting the temperature in multiple points in real time, and estimating the thermal maps, i.e. temperature as a function of space and time [15]. The impact of thermometry in a NP-enhanced ablation has a greater significance than in a standard RFA scenario, because it is meaningful for both estimating the thermal patterns in real time and therefore the size of the ablated tissue, and for investigating the effectiveness of NP and their density finding the optimum distribution. In the following, we report the RFA and FBG measurement setup (Section 2.1), the synthesis and deposition of NP (Section 2.2), and the experimental results carried out with NP concentrations of 0, 5, and 10 mg/mL (Section 3). The conclusions (Section 4) show that the FBG-based measurements highlight that RFA enhanced by NP with density of 5 mg/mL is more effective in spreading the heat to the peripheral areas of the tissue, resulting in a significant extension of the ablated tissue.

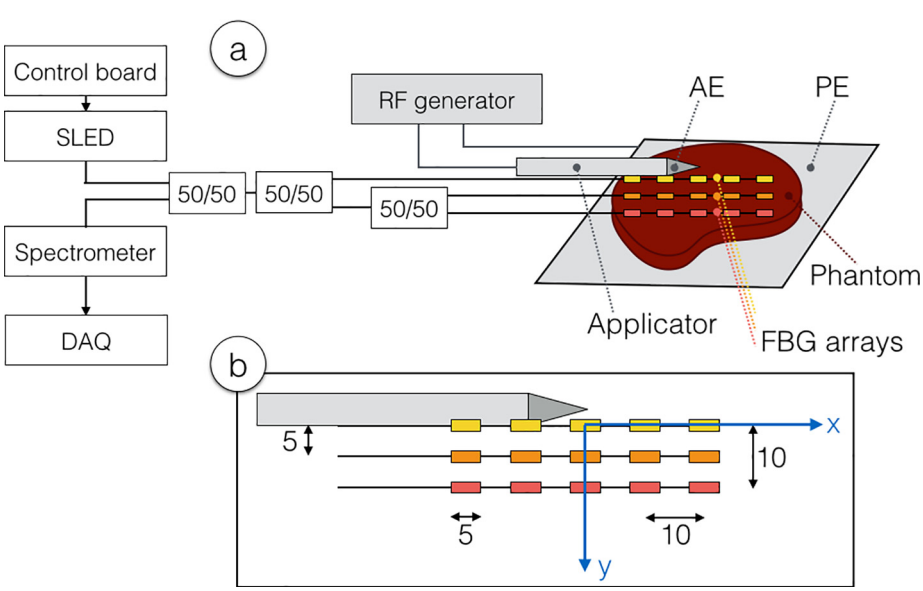

Fig. 1. Setup of the RFA thermotherapy and FBG measurement. (a) Schematic of the setup (SLED = superluminescent light emitting diode; DAQ = data acquisition; AE = active electrode; PE = passive electrode). (b) The insert shows the position of the 15 FBGs arranged in 3 arrays within the *xy* plane and relative to the RFA tip. Numbers refer to the distances in mm.