Engineering 4 (2018) 416–420

Contents lists available at ScienceDirect

Engineering

journal homepage: www.elsevier.com/locate/eng

Research
Green Industrial Processes—Article

Industrial Application of a Deep Purification Technology for Flue Gas Involving Phase-Transition Agglomeration and Dehumidification

Jianmin Liu, Fahua Zhu *, Xiuyuan Ma

State Power Environmental Protection Research Institute, State Environmental Protection Key Lab for Air Physical Simulation & Pollution Control, Nanjing 210031, China

ARTICLE INFO

Article history:
Received 13 December 2017
Revised 14 February 2018
Accepted 15 May 2018
Available online 21 May 2018

Keywords:
Moist plume
Phase-transition agglomeration
Dehumidification
Dissolved salts
SO_3
Particulate matter

ABSTRACT

A moist plume forms when the flue gas emitted from wet desulfurization equipment exits into the ambient air, resulting in a waste of water resources and visual pollution. In addition, sulfur trioxide (SO_3), water with dissolved salts, and particles in the wet flue gas form secondary pollution in the surrounding atmosphere. In this study, a deep purification technology for flue gas involving phase-transition agglomeration and dehumidification (PAD) is proposed. This deep purification technology includes two technical routes: the integrated technology of phase-transition agglomeration and a wet electrostatic precipitator (PAW); and the integrated technology of phase-transition agglomeration and a mist eliminator (PAM). Industrial applications of PAW and PAM were carried out on 630 and 1000 MW coal-fired units, respectively. The results show that the average amount of recycled water obtained from wet flue gas by means of PAD is more than 4 $g\cdot(kg\cdot{}^{\circ}C)^{-1}$. Decreasing the wet flue gas temperature by 1.5–5.3 °C allows 5%–20% of the moisture in the flue gas to be recycled; therefore, this process could effectively save water resources and significantly reduce water vapor emissions. In addition, the moist plume is effectively eliminated. With the use of this process, the ion concentration in droplets of flue gas is decreased by more than 65%, the SO_3 removal efficiency from flue gas is greater than 75%, and the removal efficiency of particulate matter is 92.53%.

© 2018 THE AUTHORS. Published by Elsevier LTD on behalf of Chinese Academy of Engineering and Higher Education Press Limited Company. This is an open access article under the CC BY license (http://creativecommons.org/licenses/by/4.0/).

1. Introduction

Coal-fired power plants are great consumers of water. The main water consumption of such a plant occurs through the vapor water discharges from the cooling tower; the second greatest water consumption occurs when steam is emitted into the atmosphere from a stack, as the power plant applies wet flue gas desulfurization (WFGD) or a wet electrostatic precipitator (WESP) [1]. The emission of wet flue gas not only results in serious waste of water resources, but also forms a moist plume that leads to significant visual pollution [2–4]. According to the local emission standard in Shanghai—"Emission standard of air pollutants for coal-fired power plants" (DB31/963–2016), the gypsum rain and colored plumes caused by coal-fired power plants must be eliminated by controlling flue gas temperature or by taking other effective measures. At present, eliminating the moist plume is mainly done by reheating the flue gas. However, reheating the flue gas consumes a great deal of energy. Moreover, the moist plume is only partly eliminated when the ambient temperature is low [5–8]. Therefore, there is an urgent need to develop a new deep purification technology for flue gas that can eliminate moist plumes effectively and recycle the moisture in flue gas.

The haze situation is still grim in China, and the removal of sulfur trioxide (SO_3) and dissolved salts in droplets of flue gas is becoming the focus of current efforts to resolve this situation. However, there is no mature technology for removing dissolved salts in droplets of flue gas, either at home and abroad. In addition, the synergistic removal efficiency of SO_3 is 50%–70% when applying existing dust and sulfur dioxide (SO_2) control equipment [9]. Therefore, it is important to develop a technology that will simultaneously remove SO_3, dissolved salts, and other pollutants from flue gas.

Moisture-recycling technologies include membrane separation, absorption, and condensation, of which only condensation is applied in some industrial installations. The condensing gas-firing boiler designed by Gaz de France and L'Industrialde Chauffage is intended to recycle latent heat by the condensation of flue gas moisture. In recent years, the Energy Research Center of Lehigh

* Corresponding author.
E-mail address: zhufahua@nepri.com (F. Zhu).

https://doi.org/10.1016/j.eng.2018.05.009
2095-8099/© 2018 THE AUTHORS. Published by Elsevier LTD on behalf of Chinese Academy of Engineering and Higher Education Press Limited Company.
This is an open access article under the CC BY license (http://creativecommons.org/licenses/by/4.0/).

University has developed a technology to recycle moisture and remove multiple pollutants synergistically in flue gas through condensation [10]. Shandong University recycles the moisture in wet flue gas by cooling desulfurization slurry [11], and Beijing SPC Environment Protection Tech Co., Ltd. recycles the moisture in flue gas by cooling water to condense flue gas. In this paper, we put forward a deep purification technology for flue gas that involves phase-transition agglomeration and dehumidification (PAD) based on indirect heat exchange condensation, in order to realize the deep synergistic removal of SO_3, dissolved salts, and $PM_{2.5}$ in wet flue gas. We analyze the principle of PAD and provide a detailed discussion on the industrial application of PAD; we also provide the key technical parameters in order to provide guidance for the popularization and application of PAD.

2. Process introduction of PAD

2.1. Principles of phase-transition agglomeration technology

The flue gas produced from the wet desulfurization process contains not only gaseous water, but also liquid water with dissolved salts. In addition, this flue gas contains solid microparticles such as dust, gypsum, and un-reacted limestone, along with gaseous acidic substances such as SO_3 [12]. When the wet flue gas cools, phase-transition coagulation occurs; solid microparticulates and fine droplets also agglomerate into large particles through collision due to convection, diffusion, and heat swimming. The SO_3 partially dissolves in the condensed water and reacts with alkaline solid particles such as dust, limestone, and other alkaline solid particles, thereby changing the ion concentration and pH of the condensed water. Fig. 1 illustrates the condensation process, which is known as phase-transition agglomeration technology (PAT). A device has been constructed that is based on the PAT principle, called the phase-transition agglomeration unit (PAU). The PAU promotes the removal of gaseous water, liquid water, dissolved salts, fine particles, and SO_3 [13–15].

2.2. PAD process design

The PAU can promote the agglomeration of fine particles and the transition of water vapor into liquid water droplets. However, it is necessary to install follow-up devices to remove fine particles and water droplets effectively. At present, the follow-up devices are the WESP or the mist eliminator (ME). PAD, which combines a PAU with follow-up devices, has a higher removal efficiency of SO_3, dissolved salts, and $PM_{2.5}$ than that of a WESP or ME. Moreover, PAD can efficiently remove ultra-fine particles with a diameter less than 1.0 μm. Without a PAU, WESP or ME cannot efficiently remove condensable particles and soluble salts; PAD magnifies the advantages of these devices and overcomes their individual technological deficiencies. In the ultra-low-emission technology that is based on WESP after WFGD, the PAU is arranged in the front of the WESP, and replaces the rectifier grille of the WESP. The combination of a PAU and a WESP forms the integrated technology of phase-transition agglomeration and a wet electrostatic precipitator (PAW). A diagram of a PAW system is shown in Fig. 2. For an ultra-low-emission technology route without a WESP, a PAU and an ME can be arranged together after desulfurization to form the integrated technology of phase-transition agglomeration and a mist eliminator (PAM), as shown in Fig. 3.

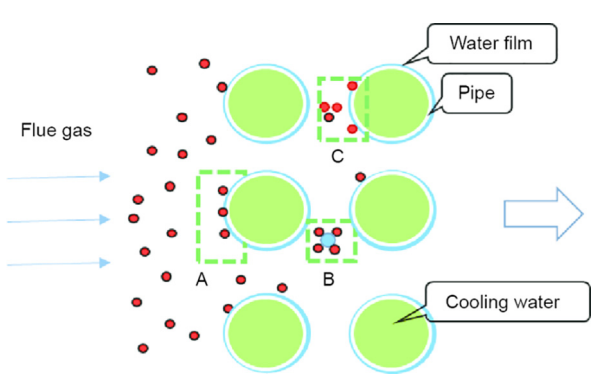

Fig. 1. The principles of PAT. Box A: particles adhere to the water film; box B: agglomeration of particles and droplets; box C: surface condensation of condensable particles.

2.3. Industrial technical parameters

The PAW was first applied to a 630 MW coal-fired unit in Jiangsu Province, China. The main industrial technical parameters of this system are provided in Table 1.

The PAM was first applied to a 1000 MW coal-fired unit in Shanghai. The main industrial technical parameters of this system are provided in Table 2.

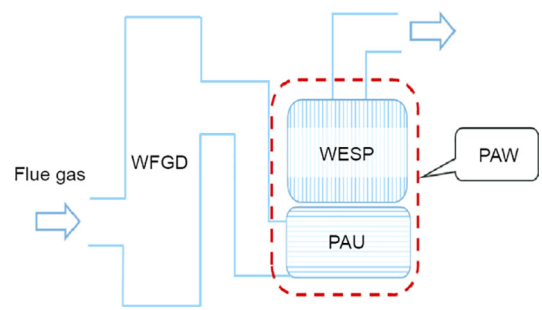

Fig. 2. Diagram of a PAW.

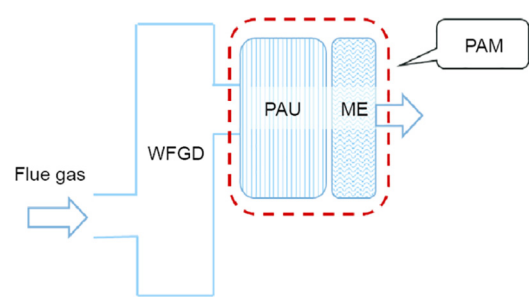

Fig. 3. Diagram of a PAM.

Table 1
Technical parameters of the PAW.

Item	Unit	Value
PAU in Jiangsu Province		
Inlet flue gas flow	$m^3 \cdot h^{-1}$	2 780 666
Inlet flue gas temperature	°C	50–57
Temperature drop	°C	2
Pressure drop	Pa	< 100
Condensed water flow	$t \cdot h^{-1}$	10–15
Cooling water flow	$t \cdot h^{-1}$	1 000
WESP in Jiangsu Province		
Pressure drop	Pa	< 250
Flue gas velocity	$m \cdot s^{-1}$	< 3
Flue gas passing time	s	> 2
Power supply rated voltage	kV	72
Power supply rated current	A	1.8

Download English Version:

https://daneshyari.com/en/article/6893294

Download Persian Version:

https://daneshyari.com/article/6893294

Daneshyari.com