Control Engineering Practice 76 (2018) 12–21

Contents lists available at ScienceDirect

Control Engineering Practice

journal homepage: www.elsevier.com/locate/conengprac

Marine diesel engine control to meet emission requirements and maintain maneuverability

Kræn Vodder Nielsen [a,b,*], Mogens Blanke [b,c], Lars Eriksson [d], Morten Vejlgaard-Laursen [a]

[a] MAN Diesel & Turbo, Teglholmsgade 41, Copenhagen, Denmark
[b] Automation and Control Group, Department of Electrical Engineering, Technical University of Denmark, Kgs. Lyngby, Denmark
[c] AMOS CoE, Institute of Technical Cybernetics, Norwegian University of Science and Technology, Trondheim, Norway
[d] Vehicular Systems, Department of Electrical Engineering, Linköping University, Linköping, Sweden

ARTICLE INFO

Keywords:
Exhaust gas recirculation
Marine diesel engine
Vessel maneuverability
Emissions reduction
Engine control

ABSTRACT

International shipping has been reported to account for 13% of global NO_x emissions and 2.1% of global green house gas emissions. Recent restrictions of NO_x emissions from marine vessels have led to the development of exhaust gas recirculation (EGR) for large two-stroke diesel engines. Meanwhile, the same engines have been downsized and derated to optimize fuel efficiency. The smaller engines reduce the possible vessel acceleration, and to counteract this, the engine controller must be improved to fully utilize the physical potential of the engine. A fuel index limiter based on air/fuel ratio was recently developed (Turbo, 2016), but as it does not account for EGR, accelerations lead to excessive exhaust smoke formation which could damage the engine when recirculated.

This paper presents two methods for extending a fuel index limiter function to EGR engines. The methods are validated through simulations with a mean-value engine model and on a vessel operating at sea. Validation tests compare combinations of the two index limiter methods, using either traditional PI control for the EGR loop or the recently developed fast adaptive feedforward EGR control (Nielsen et al., 2017a). The experiments show that the extended limiters reduce exhaust smoke formation during acceleration to a minimum, and that the suggested limiter, combined with adaptive feedforward EGR control, is able to maintain full engine acceleration capability. Sea tests with engine speed steps from 35 to 50 RPM, made peak exhaust opacity increase by only 5% points when using the proposed limiter, whereas it increased 70% points without the limiter.

1. Introduction

Nitrogen oxide (NO_x) emissions from combustion engines harm the environment and human health because these emissions contribute to the formation of smog, acid rain and tropospheric ozone. International shipping accounts for approximately 13% of global NOx emission (Smith et al., 2015). Increasingly strict emission limits have been adopted by the United Nations agency International Maritime Organization (IMO), which have thus far culminated in the Tier III standard (International Maritime Organization, 2013). This standard restricts NO_x emissions from slow-speed two-stroke crosshead diesel engines to 3.4 g/kWh. This emissions limit corresponds to a four-fold reduction compared to the earlier Tier II standard. This restriction applies to vessels constructed after the 1st of January 2016 when entering designated NO_x emission control areas (NECAs). Currently (2018), the US and Canadian coasts, Puerto Rico and the US Virgin Islands are NECAs. The North and Baltic Seas will be established as NECAs beginning in 2021. This factor of four reduction in emissions requires new approaches to engine design. Several methods, such as EGR, SCR (Selective Catalytic Reduction) and Dual Fuel Engines, are being developed and introduced to the market in order to comply to the new restrictions (Kawasaki Heavy Industries, Ltd, 2016; MAN Diesel & Turbo, 2012, 2016; Mitsubishi Heavy Industries, 2010; Winterthur Gas & Diesel, 2016). This paper focuses on the control of large two-stroke diesel engines with high-pressure EGR.

The main source of NO_x from a large two-stroke diesel engine is thermal NO_x, which is formed during combustion where high peak temperatures lead to thermal formation of NO_x, e.g. modeled using the Zeldovich mechanism (Heywood, 1988). An EGR system reduces the peak combustion temperature by recirculating exhaust gas to increase heat capacity and decrease oxygen availability in the combustion chamber. Fig. 1 shows the components of the main gas flow in a diesel engine with high-pressure EGR developed by MAN Diesel & Turbo. Intake air

* Corresponding author at: MAN Diesel & Turbo, Teglholmsgade 41, Copenhagen, Denmark.
E-mail addresses: kraenv.busk@man.eu (K.V. Nielsen), mb@elektro.dtu.dk (M. Blanke), larer@isy.liu.se (L. Eriksson).

https://doi.org/10.1016/j.conengprac.2018.03.012
Received 5 September 2017; Received in revised form 12 March 2018; Accepted 16 March 2018
0967-0661/© 2018 Elsevier Ltd. All rights reserved.

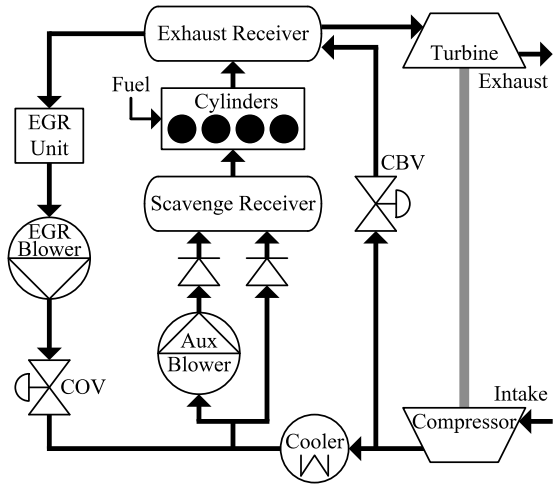

Fig. 1. Overview of main gas flows and components of a large two-stroke diesel engine with high-pressure exhaust gas recirculation and cylinder by-pass valve.

is compressed and cooled prior to entering the cylinder. Part of the hot exhaust gas is cleaned and cooled by the EGR unit, pressurized by the EGR blower and reintroduced to the scavenge receiver. The remaining part drives the turbocharger (TC). The EGR blower speed is controlled by an EGR control system that seeks to reach a load-dependent setpoint for the oxygen fraction in the scavenge receiver (Nielsen, Blanke, Eriksson, & Vejlgaard-Laursen, 2017b).

In addition to reducing emissions, increased awareness of fuel efficiency has led to downsizing and derating of large two-stroke engines. International shipping has been reported to account for approximately 2.1% of global green house gas emissions (Smith et al., 2015). The smaller engines are efficient in steady-state scenarios, but the decreased power availability makes the vessels less maneuverable. At low loads the engine performance is limited by the "turbo-lag" phenomenon, in which an increase in exhaust energy due to increased fuel input must accelerate the TC before more oxygen becomes available in the combustion chamber to react with a larger amount of fuel. An excess of fuel leads to the formation of black smoke, which pollutes the environment, is damaging to the engine, is waste of fuel and is prohibited by legislative authorities. The fuel index indicates the amount of fuel injected per combustion event. Traditionally, overfueling is avoided by implementing a fuel index limiter in the governor based on a fixed function of scavenge pressure. Basing the limit solely on the scavenge pressure tends to result in a conservative estimate that results in suboptimal acceleration. A recently developed fuel index limiter was based on a more advanced estimate of the air/fuel ratio (Turbo, 2016).

Recirculation of exhaust gases decreases the oxygen fraction in the scavenge air. Therefore, the standard fuel index limiters based on either scavenge pressure or air/fuel ratio do not apply to this configuration. Using such limiters during large accelerations leads to excessive smoke formation since some oxygen in the scavenge flow is replaced by burned gases. In early EGR engines with slow EGR controllers, the scavenge oxygen level would actually decrease during acceleration, but recent developments of fast controllers have solved this issue (Nielsen, Blanke, Eriksson, & Vejlgaard-Laursen, 2017a). Nevertheless, even with the fastest EGR controller, there is still a limit to how fast more fuel can be burned due to the TC dynamics. In this paper, the limit is calculated based on the oxygen/fuel ratio in order to maximize maneuverability while guaranteeing smoke-free acceleration. An intuitively easy solution to the acceleration problem is to simply switch off the EGR system during maneuvering, as the Tier III requirements apply to steady state conditions. However, the control system is expected to control the EGR system with a minimum of manual intervention. It is up to the EGR controller to reduce the EGR flow during acceleration and up to the index limiter to avoid excess fuel injection.

1.1. Literature

Combustion engine processes and modeling are extensively treated in Eriksson and Nielsen (2014), Guzzella and Onder (2010) and Heywood (1988). The literature on the control of large two-stroke engines primarily addresses engine speed controllers (governors), as reported in Banning, Johnson, and Grimble (1997), Blanke (1986), Blanke and Nielsen (1990), Winterbone and Jai-In (1991) and Xiros (2002). Modeling of the engine speed in response to fuel index showed that the TC inertia had a significant effect on the engine speed dynamics (Blanke & Andersen, 1984; Hendricks, 1986; Woodward & Latorre, 1985). The first NO_x emission limits led to the use of variable geometry turbochargers, which required better control schemes to avoid smoke generation during loading transients (Stefanopoulou & Smith, 2000). New methods of injection timing has also been shown to decrease the formation of NO_x (Imperato, Kaario, Sarjovaara, & Larmi, 2016). Mean-value modeling of a modern two-stroke engine without EGR was reported by Theotokatos (2010) and this model was used for several investigations in Baldi, Andersson, and Theotokatos (2015), Guan, Theotokatos, and Chen (2015), Guan, Theotokatos, and Zhou (2014) and Theotokatos and Tzelepis (2015). A combustion model that showed the NO_x reduction potential of EGR was published in Raptotasios, Sakellaridis, Papagiannakis, and Hountalas (2015).

Fuel index limiters have not received considerable attention in the literature. The subject was briefly mentioned in Xiros (2002). A new air/fuel ratio limiter was presented in Turbo (2016) and Vejlgaard-Laursen and Olesen (2016).

A number of papers on the control of EGR on large two-stroke engines have been published, starting with Hansen, Zander, Pedersen, Blanke, and Vejlgaard-Laursen (2013), where a mean-value engine model (MVEM) of a large two-stroke engine with high-pressure EGR was developed. Achievable EGR control performance with SISO design was investigated in Hansen, Blanke, Niemann, and Vejlgaard-Laursen (2013) based on a linearization of the MVEM. An extended and improved version of the model was reported in Alegret, Llamas, Vejlgaard-Laursen, and Eriksson (2015) where the parameterization method was also revised. The authors of the present paper first proposed a simplified scavenge oxygen model and nonlinear adaptive EGR controller in Nielsen, Blanke, and Vejlgaard-Laursen (2015). A control-oriented scavenge oxygen model was analytically derived from the MVEM in Nielsen et al. (2017b), and a joint state and parameter estimator for this model was presented in Nielsen, Blanke, and Eriksson (2017) along with a proof of exponential convergence. An adaptive feedforward EGR controller based on an inversion of the control-oriented oxygen model was presented in Nielsen et al. (2017a) along with convergence proofs and results from a sea trial that showed significant improvement compared to a PI controller.

EGR control for four-stroke automotive engines is more common in the literature (Huang, Zaseck, Butts, & Kolmanovsky, 2016; van Nieuwstadt, Kolmanovsky, Moraal, Stefanopoulou, & Jankovic, 2000; Wahlström & Eriksson, 2011a, 2011b, 2013; Wahlström, Eriksson, & Nielsen, 2010; Wang, Tian, Bosche, & El Hajjaji, 2014) compared to marine two-stroke engines. These approaches cannot be directly transferred due to the differences in engine airflow setup and scavenging in 2-stroke and 4-stroke engines, system time constants, sensor setup, control objective and engine test bed availability (Raptotasios et al., 2015; Xiros, 2002).

1.2. Contributions

The main contributions of this paper are as follows:

1. Two methods are proposed that extend an existing fuel index limiter to engines with EGR systems.
2. The methods are validated in simulation with a high-fidelity mean-value engine model and on a vessel operating at sea. Several combinations of limiters and EGR controllers are compared.

Download English Version:

https://daneshyari.com/en/article/7110281

Download Persian Version:

https://daneshyari.com/article/7110281

Daneshyari.com