Measurement 90 (2016) 199–207

Contents lists available at ScienceDirect

Measurement

journal homepage: www.elsevier.com/locate/measurement

# System for gas pressure measurements in the arc plasma environment

D. Smugala [a,*], P. Oramus [a], P. Krysztofiak [a], M. Bonk [b], P. Piekarski [c], T. Kaczmarczyk [d]

[a] ABB Corporate Research Centre, Starowislna 13A, 31-038 Cracow, Poland
[b] AGH University of Science and Technology, Mickiewicza 30, Cracow, Poland
[c] ABB MV Products Technology Center, Leszno 59, Przasnysz, Poland
[d] Institute of Power Engineering, Mory 8, Warsaw, Poland

ARTICLE INFO

*Article history:*
Received 17 July 2015
Received in revised form 21 March 2016
Accepted 25 April 2016
Available online 28 April 2016

*Keywords:*
Arc quenching
Arc energy
Gas pressure
Measurement system

ABSTRACT

Developed measurements system for evaluation of gas pressure value in direct vicinity of switching arc plasma was described in this paper. The system is resistant to heavy duty conditions present inside the MV switch quenching chamber and its functionality was verified during large scale functional tests. In this paper results of gas pressure measurements performed for a current interrupter equipped with an arc quenching system based on combination of forced air flow and gassing material ablation were presented. Gas pressure was measured by means of developed system, for several values of capacitive load current at 12/24 kV supplying voltage.

© 2016 Elsevier Ltd. All rights reserved.

## 1. Research topics

### 1.1. Research area

Air insulated Load-Break Switch (LBS) was selected to perform research, described in this paper. Examined switch was equipped with effective arc extinguishing systems designed to interrupt a load currents ranged of hundreds of amperes at Medium Voltage (MV). For arc quenching efficiency enhancement switch features based on linking two technologies – arc quenching system based on forced air flow through the specially designed arc extinguishing chamber nozzle made of material generating a gas at high temperature (polioxymethylene – POM) [1]. Parameters of generated gas (pressure and flow) strongly impact on chamber internal temperature value and atmosphere deionization between the contacts [1,2]. In a switch equipped with nozzle fabricated of gassing material, value of interrupted current determines also a volume of gas generated by ablating the nozzle material. Arc quenching effectiveness strongly depends on volume and pressure of cooling medium existent inside the quenching chamber. In other hand, a voltage level between the contacts influences on restrikes occurrence probability. To summarize, the higher gas pressure could be reached inside the quenching chamber, the higher arc quenching efficiency could be achieved.

Precise evaluation of interrupters extinguishing system effectiveness is problematical due to heavy duty conditions occurring in a plasma arc environment.

Because of extremely high temperature occurrence in a chamber caused by plasma presence, phenomenon short duration and high probability of high-energy electric breakdown between the contacts and measurement equipment occurrence, problem of gas pressure estimation inside the extinguishing system is very difficult. In practice, it is usually realized by means of dedicated Computational Fluid Dynamics (CFD) simulations [1,3] and dedicated analytic calculations [4,5].

Reliable functional tests results, supporting simulations would give a view for the most perspective improvements of arc quenching methods. Due to heavy-duty conditions present inside the quenching chamber, related functional tests are rare. The recent measurement tools development progress allows for utilization of a new equipment providing reliable measurements at ultra-hostile environments [6,7].

### 1.2. Experiments goal

Material included in this paper presents developed tests stand utilized for pressure measurements in a switching arc environment. Recorded signals data processing approach was described in this paper, as well.

* Corresponding author.
*E-mail addresses:* dariusz.smugala@pl.abb.com (D. Smugala), piotr.oramus@pl.abb.com (P. Oramus), piotr.krysztofiak@pl.abb.com (P. Krysztofiak), bonkm@agh.edu.pl (M. Bonk), piotr.piekarski@pl.abb.com (P. Piekarski), tomasz.kaczmarczyk@ien.com.pl (T. Kaczmarczyk).

http://dx.doi.org/10.1016/j.measurement.2016.04.060
0263-2241/© 2016 Elsevier Ltd. All rights reserved.

Executed experiments were aimed at gas pressure measurements inside the switch extinguishing chamber during MV breaking operations. In order to perform research, developed measurement system was used. It consisted of high-frequency piezoelectric pressure sensor (Table 1), analog/digital–digital/analog (A/D–D/A) converter and fiber-optic data transmission link. A/D–D/A converter and fiber optic link permitted for galvanic isolation of MV part of test-stand and the equipment operating at ground potential.

Attempts to apply piezoelectric sensor for pressure measurements, have already been performed for low voltage systems and for significantly lower arc plasma energy [7–11].

Measurement system described in this paper has been experimentally verified during large scale tests performed for capacitive current interruption at 12 kV and 24 kV supplying voltage. Using a fiber optic connection between the metal casted sensor and measurement fixture, risk of flashover to the measurement equipment was minimized, so in consequence, no additional electrostatic shielding was required.

Gas pressure measurements were performed for typical MV air insulated switch equipped with forced air flow mechanism and nozzle made of gassing material. Nozzle characterized by c.a. 15 $cm^3$ of internal volume and c.a. 50 $cm^2$ area of potentially ablating surface during arc ignition was used for tests. Pressure registration inside the cylinder being in charge of an air flow intensity, permitted to estimate expected gas backflow during arc quenching. Such procedure gave a view for particular components influence on total arc quenching system efficiency.

## 2. Measuring set-up

### 2.1. Object under tests and tests equipment

Objects of the research were a typical air insulated LBSs dedicated for interrupting maximum load currents ranged from 400 A to 1250 A at 12/24 kV. In the tested objects, depends on the current value and recorded arcing time, different factor takes a main role for arc quenching efficiency (air blow or gassing material). For this reason, functional analysis aimed at gas pressure measurements inside the extinguishing chamber in direct vicinity of switching arc plasma was executed utilizing elaborated tests stand (Fig. 1).

### 2.2. Tests-stand description

Diagram shown in Fig. 1 presenting utilized test-stand and comprising the following fixture:

- high frequency pressure sensor responsible for transformation of the pressure changes signal into electric signal,
- conditioner securing power supply for sensor and sensor signal normalization,

**Table 1**
Pressure sensor basic parameters (provided by PCB Piezotronics Inc.).

| Performance | SI |
|---|---|
| Measurement Range | 1379 kPa |
| Sensitivity (±15%) | 3.516 mV/kPa |
| Maximum pressure | 6895 kPa |
| Resolution | 0.007 Pa |
| Rise time | ⩽1.0 μs |
| Non-linearity | ⩽1.0% FS |
| Acceleration Sensitivity | ⩽1.4 kPa/(m/s$^2$) |
| Maximum flash Temperature | 1649 °C |
| Temperature Range Operating | −73 °C to + 135 °C |

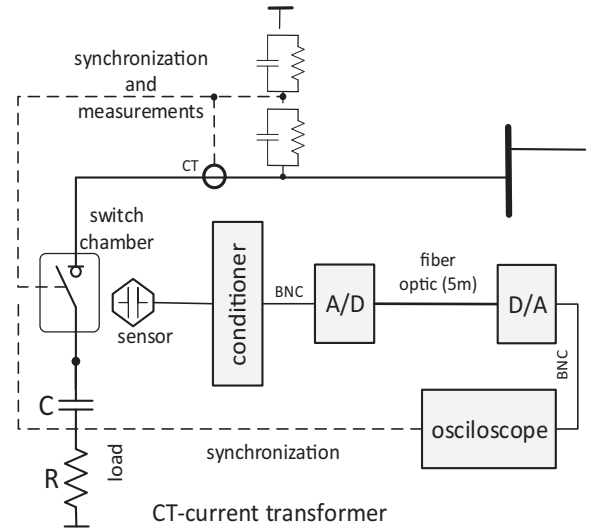


**Fig. 1.** Measurement stand diagram.

**Table 2**
A/D and D/A converters selected parameters (provided by SpeaKa Professional).

| Performance | D/A converter | A/D converter |
|---|---|---|
| Frequency response | <0.5 dB | |
| Sampling rate | 48 kHz | |
| Signal to Noise | <−109 dB | 70 dB |
| Degree of separation | <−100 dB | 74 dB |
| 24 bit S/PDIF Inc. bit stream on Left/Right channels | | |

**Table 3**
Selected average results for 12 kV tests.

| Forced air flow | | | | |
|---|---|---|---|---|
| Current (A) | max. $P_{arc}$ (kVA) | $t_{arc}$ (ms) | $E_{arc}$ (VAs) | $p$ (kPa) |
| 120 | 30 | ≈3.5 | 75 | 6.25 |
| | 33 | | 87 | 7.5 |
| | 34 | | 87 | 7 |
| 20 | 15 | ≈4 | ≈32 | 5 |
| | 14 | | | 3.75 |
| | 15 | | | 3.75 |

where (arcing time – $t_{arc}$, arc power – $P_{arc}$, arc energy $E_{arc}$).

- fiber optic cable connection between the A/D and D/A converters responsible for galvanic separation of high potential set-up part (sensor, conditioner) and low potential set-up fixture (e.g. oscilloscope),
- recording device characterized by 100,000 sampling rate,
- triggering device responsible for switch opening instant adjustment (current phase) and trigger–recorder synchronization,
- capacitive character of load to increase voltage across the switch contacts, induce restrikes and elongate arcing time,
- voltage divider and current transformer to provide permanent supplying voltage monitoring and current phase adjustment.

Due to specific conditions present inside the chamber during tests, used sensors (Table 1) were characterized by high temperature-resistance (up to 204 °C). For appropriate operation it was necessary to supply the sensor with 20 mA of constant current at 30 V, secured by sensor's conditioner.

Very high-natural sensor frequency gave wide operating frequency range (>100 kHz), exceptionally fast response time (1 μs)

Download English Version:

https://daneshyari.com/en/article/7123433

Download Persian Version:

https://daneshyari.com/article/7123433

Daneshyari.com