Sensors and Actuators B 235 (2016) 525–534

Contents lists available at ScienceDirect

Sensors and Actuators B: Chemical

journal homepage: www.elsevier.com/locate/snb

Chemoresistive micromachined gas sensors based on functionalized metal oxide nanowires: Performance and reliability

S. Vallejos[a,*], I. Grácia[b], O. Chmela[a], E. Figueras[b], J. Hubálek[a], C. Cané[b]

[a] SIX Research Centre, Faculty of Electrical Engineering and Communications, Brno University of Technology, 601 90 Brno, Czech Republic
[b] Instituto de Microelectroínica de Barcelona (IMB-CNM, CSIC), 08193 Cerdanyola, Barcelona, Spain

ARTICLE INFO

Article history:
Received 24 February 2016
Received in revised form 8 April 2016
Accepted 19 May 2016
Available online 20 May 2016

Keywords:
Micromachined gas sensor
Nanowires
Electrodes
Optimization

ABSTRACT

Chemoresistive micromachined gas sensors with bottom-electrode configuration and based on Pt-functionalized tungsten oxide nanowires are fabricated. The performance and reliability of three types of devices with different electrode gap (5, 10 and 15 μm) are analyzed in dry and humid ambient and towards various analytes (H_2, NO_2, EtOH, and CO). Results demonstrate an improved response, sensitivity, and stability with better dynamic of the response for the sensors with the electrode gap of 5 μm, showing up to 7-fold higher responses and 32-fold faster responses towards hydrogen compared to the sensors with the electrode gap of 10 or 15 μm. These results are connected with the increment of the density of nanowire junctions across the electrodes with 5 μm gap; separation that corresponds to half of the length of the wires used in this work.

© 2016 Elsevier B.V. All rights reserved.

1. Introduction

Nanowire-based devices (e.g., chemical sensors or field-effect transistors) have demonstrated improved performance compared to their counterparts based in thin films, but the emerging of these structures as building blocks of micro/nano devices has also set fundamental challenges for the assembly technologies and the integrated-circuits industry, often due to the incompatibilities between the nanowire production on large scale and the micro/nano-device fabrication methods [1]. These incompatiblity issues hinder the use of certain technologies, for instance those utilized for fabricating Micro-Electro-Mechanical Systems (MEMS), which (among other ends) are commonly employed in chemoresistive gas sensors to reduce the electrical power consumption [2].

In chemoresistive nanowire-based gas sensors, nanowires bridge positive and negative electrodes to allow the electrical current to flow, and thus monitor the resistance or conductance changes produced by the adsorption of gaseous analytes at the surface of nanowires (typically metal oxides, although other materials such as silicon or carbon nanotubes CNTs are also used with the same principle) [1,3,4]. Consequently, the performance (particularly, response magnitude, sensitivity, stability, and reproducibility) of the gas sensor systems can be influenced by the features of both the electrodes and the sensitive material. Technologically, bottom-electrode architectures are preferred for chemoresistive nanowire-based sensors, as these systems do not require of post-processing steps for their integration, something that prevents the introduction of contaminants into the sensitive materials [3,5], whereas composite materials (e.g., nanowires functionalized with second-phase nanoparticles (NPs)) are preferred as sensitive materials due to their proved better gas sensing properties, originated from chemical and/or electronic sensitization mechanisms [6–8], particularly when the size of these materials is within the Debye length (L_D) of the surface (typically on the order of 2–100 nm) and the second-phase constituents are introduced in small, discrete amounts [8].

Nanowire assembly technologies generally include the transfer of pre-grown nanowires or the direct growth of nanowires onto the device. The first is largely used to integrate and align nanowires on the electrodes, though has proved critical in chemical sensing applications (e.g., gas sensing) due to the need of transfer media (e.g, liquids) that often degrade the surface properties of the wires [1]. The second, in contrast, avoids the use of transfer media and can simplify the processing steps for assembling nanowires, particularly when using bottom-up approaches (i.e., methods based on the growth of the structure through assemble of atoms derived from chemical precursors) rather than top-down approaches (i.e., methods based on carving, slicing or etching a macroscale material source) [9]. Chemical Vapor Deposition (CVD) and modifications such as Aerosol Assisted (AA) CVD are bottom-up techniques and

* Corresponding author.
E-mail address: vargas@feec.vutbr.cz (S. Vallejos).

http://dx.doi.org/10.1016/j.snb.2016.05.102
0925-4005/© 2016 Elsevier B.V. All rights reserved.

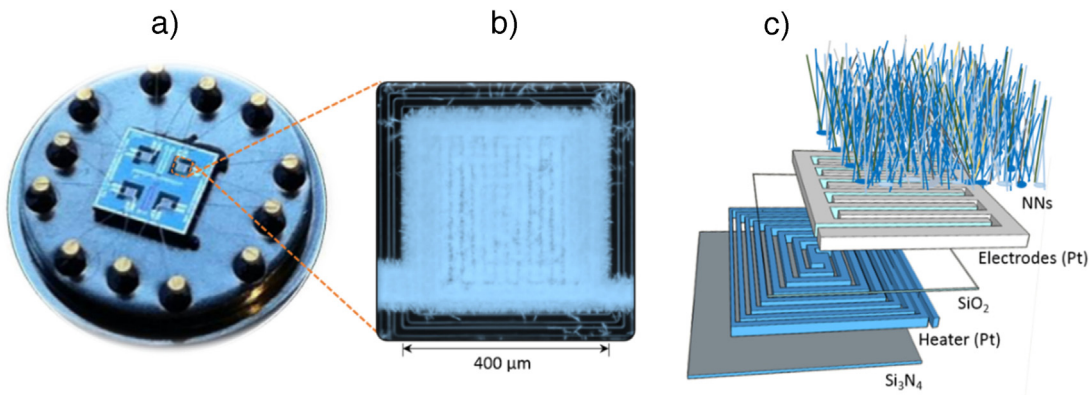

Fig. 1. Array of micromachined sensors mounted on a standard TO8 package (a), optical microscope imaging of the functionalized nanostructures grown directly on the micromachined platforms (b), and schematic view of the layers comprising the micromachined membrane (c).

have proved to be suitable for large-scale synthesis of nanowires both via vapor-liquid-solid (VLS) or vapor-solid (VS) mechanisms, i.e., with (for VLS) or without (for VS) the assistance of catalysts as seeds. [10]

Recently, we have developed a method for fabricating gas microsensors based on direct integration of nanowires into micromachined platforms and their functionalization with second-phase NPs in a single-step process via AA-CVD [11–13]. Those systems, based on bottom-electrodes and tungsten oxide nanowires, demonstrated improved sensing response compared to polycrystalline gas-sensitive films, as well as enhanced responses with faster response rates when the nanowires were functionalized with metals (e.g., Au, Pt) [11] or other metal oxides (e.g., Cu_2O [13], Fe_2O_3 [12]). However, despite having established the methods for processing these gas sensitive materials, the evaluation of the electrode configuration and its influence on the functionality of the whole sensor system has not been reported previously.

Here, we evaluate the performance and reliability of micromachined sensors, provided with different bottom interdigitated electrode (IDE) configuration, using Pt-functionalized tungsten oxide nanowires grown via AA-CVD as the sensitive material model. These microsensors are tested towards various gaseous species (H_2, NO_2, EtOH, and CO) in dry and humid ambient, and key factors of the sensor operation such as sensitivity, selectivity and stability are examined.

2. Experimental

2.1. Fabrication and processing steps

Micromachined platforms consisting of a suspended membrane (1 × 1 mm) of Si_3N_4 (300 nm thick), containing a Ti/Pt resistive heater (covering an area of 400 × 400 µm, 25 nm/250 nm thick, meander shaped) and Ti/Pt IDEs with different electrode gaps of 5, 10 or 15 µm (covering an area of 280 × 280 µm, 25 nm/250 nm thick), isolated by an interlevel silicon oxide layer (500 nm thick), were produced at wafer-level employing various microfabrication steps such as implantation, photolithography, etching, metallization, lift-off and rear side anisotropic etching of the substrate to define the membranes.

Pt-functionalized tungsten oxide nanowires were grown at 390 °C on the top of the electrodes via AA-CVD of tungsten hexacarbonyl (20 mg, $W(CO)_6$, Sigma-Aldrich, ≥97%) and hexachloroplatinic acid hydrate (4 mg, $H_2PtCl_6{\cdot}xH_2O$, Sigma-Aldrich,

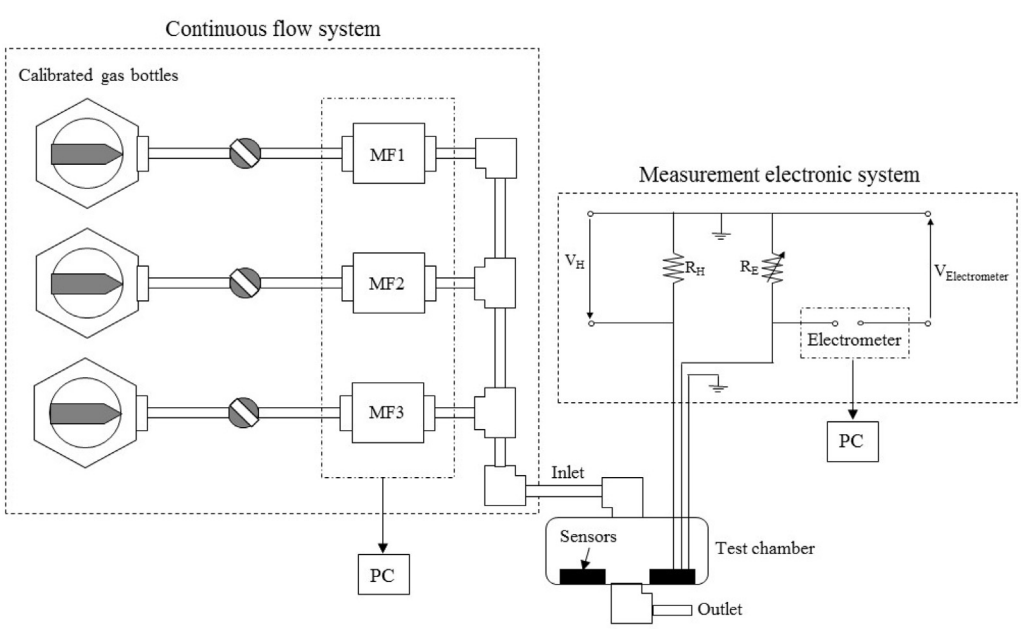

Fig. 2. Gas testing system. MF: mass flow, V_H: microheater bias voltage, R_H: microheater resistance, R_E: resistance of the gas-sensitive film (nanowires).

Download English Version:

https://daneshyari.com/en/article/7143321

Download Persian Version:

https://daneshyari.com/article/7143321

Daneshyari.com