Bioelectrochemistry 113 (2017) 79–84

Contents lists available at ScienceDirect

Bioelectrochemistry

journal homepage: www.elsevier.com/locate/bioelechem

Characterization and performance of anodic mixed culture biofilms in submersed microbial fuel cells

Beenish Saba [a,b,*], Ann D. Christy [a], Zhongtang Yu [c], Anne C. Co [d], Rafiq Islam [e], Olli H. Tuovinen [f]

[a] Department of Food, Agricultural and Biological Engineering, Ohio State University, 590 Woody Hayes Drive, Columbus, OH 43210, USA
[b] Department of Environmental Sciences, PMAS Arid Agriculture University, Rawalpindi 46300, Pakistan
[c] Department of Animal Sciences, Ohio State University, 2029 Fyffe Road, Columbus, OH 43210, USA
[d] Department of Chemistry and Biochemistry, Ohio State University, 100 West 18th Avenue, Columbus, OH 43210, USA
[e] Piketon Research and Extension Center, Ohio State University South Centers, 1864 Shyville Road, Piketon, OH 45661, USA
[f] Department of Microbiology, Ohio State University, 484 West 12th Avenue, Columbus, OH 43210, USA

ARTICLE INFO

Article history:
Received 27 July 2016
Received in revised form 9 October 2016
Accepted 10 October 2016
Available online 13 October 2016

Keywords:
Biofilms
Impedance spectroscopy
Microbial fuel cells
Power generation

ABSTRACT

Microbial fuel cells (MFCs) were designed for laboratory scale experiments to study electroactive biofilms in anodic chambers. Anodic biofilms and current generation during biofilm growth were examined using single chambered MFCs submersed in algal catholyte. A culture of the marine green alga *Nanochloropsis salina* was used as a biocatholyte, and a rumen fluid microbiota was the anodic chamber inoculum. Electrical impedance spectroscopy was performed under varying external resistance once a week to identify mass transport limitations at the biofilm-electrolyte interface during the four-week experiment. The power generation increased from 249 to 461 mW m^{-2} during the time course. Confocal laser scanning microscopy imaging showed that the depth of the bacterial biofilm on the anode was about 65 μm. There were more viable bacteria on the biofilm surface and near the biofilm-electrolyte interface as compared to those close to the anode surface. The results suggest that biofilm growth on the anode creates a conductive layer, which can help overcome mass transport limitations in MFCs.

1. Introduction

Numerous microbial fuel cell (MFC) designs and configurations, electrogenic bacteria, and electron donors have been presented in the literature. Several groups of electron acceptors in the cathode chamber have been successfully tested, such as direct exposure to air as in air cathodes [1], catholyte chemical solutions such as K-ferricyanide, and biocatholytes that involve bacterial reduction of external electron acceptors (e.g., nitrate) or algae growing in the catholyte [2]. Pure cultures or microbial consortia in MFC systems grow as planktonic cells and biofilms on the anode. Planktonic cells may participate in the electron transfer from the substrate to the anode through electron shuttles (mediators). However, biofilms on the anode are largely responsible for anaerobic respiration and transfer of electron equivalents to the closed circuit. It is inevitable that stable biofilms have layers with active and inactive cells depending on the mode and rate of biomass growth on anode surface [3]. Other factors may also impact the internal resistance, such as electrolyte composition, bacteria-anode surface interactions, electronic resistance of electrode materials, temperature, and pH. Mass transport limitation at the biofilm-anode interface is one of the underlying factors that affect the kinetics of MFC systems [4].

A submersible MFC design was employed for the present study. In general, the submersible MFC configuration has two basic configurations: (1) a single cathodic chamber containing both the catholyte and the cathode embedded in an anaerobic sediment environment [5–6] with the anode immersed in a highly reduced anaerobic sediment zone; or (2) a single anodic chamber, with the anode and anolyte suspended in a feed solution such as wastewater and the external cathode exposed to aerobic conditions [7]. Zhang and Angelidaki [6] developed single chambered, self-stacked submersible MFCs and harvested up to 294 mW m^{-2} using lake sediments as inoculum and substrate. Zhang and Angelidaki [8] also used submersible two-chambered MFCs for power generation with an aerated NaCl solution as the catholyte. In the present study, a submersible MFC configuration was designed to accommodate marine algae in the catholyte. The purpose of the work was to investigate the electroactivity of anodic biofilms under varying external resistance in single chamber anode MFCs submersed in algal catholyte.

* Corresponding author at: Department of Food, Agricultural and Biological Engineering, Ohio State University, 590 Woody Hayes Drive, Columbus, OH 43210, USA.
E-mail address: saba.20@osu.edu (B. Saba).

http://dx.doi.org/10.1016/j.bioelechem.2016.10.003
1567-5394/

2. Materials and methods

2.1. Submersible MFC assembly and operating conditions

Three identical anodic chambers were constructed and placed in a 5-L clear acrylic open tank (Fig. 1), which contained the algal culture. The MFC assembly was fabricated from cast acrylic tubing (AIN Plastics, Columbus, OH) with an 8.9 cm outer diameter and 2.5 cm width, including two 9.5 mm holes and one 3 mm hole drilled within the perimeter of 7.6 cm length for check valve insertion and two sampling ports. The anode chamber was made airtight by inserting a rubber stopper in one port and a check valve in the other port. The cathode electrode was attached outside the assembly and submersed in the 5-L algal culture tank. The working volume of the anode chamber was 100 mL. Circular pieces of 0.45 mm Strong Acid Cation Exchange membrane (Membranes International, Ringwood, NJ) were inserted to cover both ends of the acrylic tubing. Two equal-size electrodes were prepared from EC-12 grade EDM ($5 \times 3.5 \times 0.5$ cm) blank graphite plates (GraphiteStore.com). Electrodes were pretreated as described by Bond and Lovley [9]. The measured ohmic resistance of the electrodes was $0.8 \pm 0.3\ \Omega$. A decade box was used to regulate the external resistance between the anode and the cathode.

Two MFCs were used for treatments (setup 1 and 2) and one MFC was used as an abiotic control (Fig. 1). *Nanochloropsis salina* was cultured in 3 L to optical density of 0.53–0.6 at 600 nm for use as the catholyte in the 5-L plastic tank. Four magnetic stirrers were used for continuous mixing of the algal suspension. The anode chamber was filled with medium and rumen fluid inoculum (in 9:1 ratio) in an anaerobic chamber. The assemblies were placed in an incubator at 39 ± 1 °C equipped with non-thermal fluorescent light (1800 lm). The time course was comprised of two weeks for acclimatization under open circuit conditions and four weeks of power generation after performing a polarization test. Electrical impedance spectroscopy (EIS) was performed weekly. The MFCs were operated on a fed batch cycle every 24 h.

2.2. Microorganisms

Rumen fluid microorganisms from previous glucose-fed MFCs were used as inoculum for the anodic chamber. The original culture was enriched from rumen fluid and maintained in laboratory MFCs [10]. The anolyte medium contained (per L): 450 mg K_2HPO_4, 450 mg KH_2PO_4, 900 mg NaCl, 900 mg NH_4Cl, and 90 mg $MgSO_4 \cdot 7H_2O$. Cysteine-HCl (500 mg L^{-1}) was added initially as an oxygen scavenger [11]. A mixture of glucose (5 g L^{-1}), tryptone (15 g L^{-1}), and yeast extract (5 g L^{-1}) was used as the substrate and electron donors throughout the experiments. The anolyte was purged with CO_2 for 1 h to remove the dissolved O_2 followed by adjustment of pH to 6.8 with NaOH. The catholyte was inoculated with the marine green alga *Nanochloropsis salina* (CCAP 849/6). The culture was originally obtained from the Culture Collection of Algae and Protozoa (Oban, UK) and was a gift of Dr. Yebo Li (Ohio Agricultural Research and Development Center, Wooster, OH). The medium contained 40 g L^{-1} sea salt, 1 mL f/1 media, 1 mL f/2 media, 1 mL vitamin mix and 1 mL mineral mix for growing algae under non-thermal fluorescent lights [12].

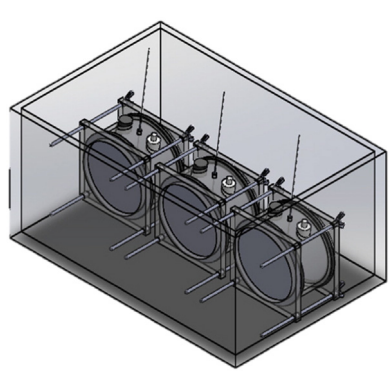

Fig. 1. Experimental MFC setup with three single anode chambers submersed in an acrylic container filled with algal culture.

2.3. Biofilm analysis

Anodes for confocal laser scanning microscopy (CLSM) were gently rinsed with 10 mM phosphate buffer (pH 7.4) for 2 min to remove residual culture broth. Random areas of the biofilm on each 10×10 mm small pieces were examined using CLSM. One small piece of electrode was attached on the surface of each anode for biofilm analysis. Sequential imaging was performed at different heights throughout the sample to measure biofilm thickness and bacterial viability. Fluorescent live/dead bacterial biofilm staining was performed using SYTO 9 and propidium iodide (1:1 mixture) according to the manufacturer's instructions (Thermo-Fisher Scientific, Pittsburgh, PA). The excitation/emission maxima were set to 480/500 nm for SYTO 9 and 490/635 nm for propidium iodide. Simultaneous dual-channel imaging was used to display green (live cells) and red (dead cells) fluorescence. A Leica TCS SP6 CLSM with a digital camera attached was used to capture the images.

The biofilm on the anode was also examined under a Hitachi S-3500N scanning electron microscope (SEM). Samples were fixed using 3% glutaraldehyde and 2% paraformaldehyde in 0.1 M KH_2PO_4/K_2HPO_4 buffer (pH 7.2) and dried under vacuum for 1 h. Samples were washed with the buffer three times for 10 min each. The samples were dehydrated with ethyl alcohol at 25, 50, 70, 95 and 100% concentrations, 15 min each. The samples on specimen stubs were coated with gold before examination.

2.4. Electrochemical measurements and power generation

The electrical output of each MFC was monitored by measuring the potential difference (voltage) between the anode and the cathode across a known resistance (R) using a data acquisition unit (DataQ Instrument, Akron, OH) connected to a PC. Voltage was recorded every 10 s. Power density (W m^{-2}) was calculated according to the equation, $P = I \times V/A$, where V is the voltage (V), I ($I = V/R$) the current (amps), and A the area (m^2) of the electrode used in the anodic chamber. Polarization characteristics were determined by varying the external resistance between the electrodes stepwise from 1 MΩ to 9.9 Ω with a 30 min pause at each resistance to allow the voltage to reach a stable value. EIS measurements were performed using a potentiostat configuration with an SI 1260 Solartron 1260 impedance/gain phase analyzer (Solartron Analytical, Leicester, UK) interfacing with a PC. For the EIS, the high frequency was set at 10^5 Hz and the low frequency at 0.1 Hz. The amplitude of the alternating current signal was ± 5 mV. The anode serving as the working electrode, the cathode as the counter electrode, and 1 M KCl Ag/AgCl as the reference electrode. A decade box was used for varying the external resistance.

3. Results and discussion

3.1. Biofilm formation and viability

The consortium used in the MFCs was comprised of gram-positive bacteria, dominated by *Clostridium*, *Lactobacillus* and *Enterococcus* spp. [12]. The thickness of the biofilm and the relative proportions of dead and live cells were examined after one week of closed circuit MFC operation. Sequential imaging with CSLM demonstrated that live (green) and dead (red) cells were almost equally distributed on the electrode