Available online at www.sciencedirect.com

ScienceDirect

Energy Procedia 136 (2017) 394–401

Energy Procedia

www.elsevier.com/locate/procedia

4th International Conference on Energy and Environment Research, ICEER 2017, 17-20 July 2017, Porto, Portugal

Investigation of new generation refrigerants under two different ejector mixing theories

Ayşe Uğurcan Atmaca[a,*], Aytunç Erek[a], Orhan Ekren[b]

[a]*Dokuz Eylül University, Faculty of Engineering, Mechanical Engineering Department, Tınaztepe Yerleşkesi 35397 Buca, İzmir, Turkey*
[b]*Ege University, Solar Energy Institute, 35100 Bornova, İzmir, Turkey*

Abstract

The use of ejectors in the vapor compression refrigeration cycles as an expansion device is of great importance since they decrease the compression work and increase the evaporation capacity to make the overall cycle much more efficient. In this study, ejector expansion refrigeration cycle is compared with vapor compression refrigeration cycle as the starting point of the discussion. The environmentally friendly refrigerants, R1234yf and R1234ze(E) are chosen from the HFOs for the purpose of the performance improvement declarations and operation condition analyses regarding the ejector expansion refrigeration cycle, i.e., COP and entrainment ratio variations caused by the change in the area ratio. R134a as well is chosen from the HFCs in order to create a comparative basis although it is about to be prohibited by Directive 2006/40/EC and Regulation (EU) No 517/2014. Thermodynamic models are established using Matlab® via conservation laws of mass, momentum, and energy.

© 2017 The Authors. Published by Elsevier Ltd.
Peer-review under responsibility of the scientific committee of the 4th International Conference on Energy and Environment Research.

Keywords: Constant area mixing; constant pressure mixing; ejector; hydrofluorocarbons (HFCs); hydrofluoroolefins (HFOs); throttling losses

Nomenclature

w	Entrainment ratio (ratio of the mass flow rate of the secondary fluid to the primary fluid), [-]
ϕ	Area ratio (ratio of the occupied area by the total flow to the primary flow), [-]

* Corresponding author. Tel.: +90 232 3019245; fax: +90 232 3019204.
E-mail address: ugurcan.atmaca@deu.edu.tr

1876-6102 © 2017 The Authors. Published by Elsevier Ltd.
Peer-review under responsibility of the scientific committee of the 4th International Conference on Energy and Environment Research.
10.1016/j.egypro.2017.10.271

T	Temperature, [K]
P	Pressure, [kPa]
R	COP ratio of the ejector expansion refrigeration cycle to the basic cycle, [-]
η	Efficiency, [-]
h	Enthalpy, [kJ/kg]

Abbreviations

COP	Coefficient of Performance
HFCs	Hyrofluorocarbons
HFOs	Hydrofluoroolefins
CPM	Constant pressure mixing
CAM	Constant area mixing
GWP	Global warming potential
ODP	Ozone depletion potential

Subscripts

n	Ejector expansion refrigeration cycle
b	Vapor compression refrigeration cycle
e	Evaporator
c	Condenser
sat	Saturation condition
bm	Mixing chamber inlet
sh	Super-heated state
sc	Sub-cooled state
mn	Motive nozzle
sn	Suction nozzle
diff	Diffuser
comp	Compressor

1. Introduction

In this paper, ejector expansion refrigeration cycle is investigated in detail. Vapor compression refrigeration cycle and ejector expansion refrigeration cycle is compared in Fig. 1 (a) and (b). As it is clear from the figure, the basic cycle is modified with the addition of the ejector and vapor-liquid separator.

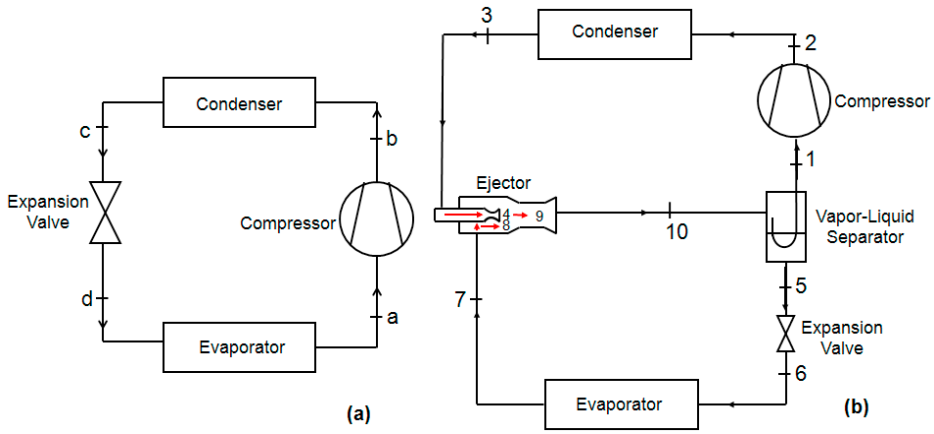

Fig. 1. (a) Vapor compression refrigeration cycle and (b) ejector expansion refrigeration cycle.

Download English Version:

https://daneshyari.com/en/article/7918443

Download Persian Version:

https://daneshyari.com/article/7918443

Daneshyari.com