Journal of Nuclear Materials 499 (2018) 317–325

Contents lists available at ScienceDirect

Journal of Nuclear Materials

journal homepage: www.elsevier.com/locate/jnucmat

An investigation on high temperature fatigue properties of tempered nuclear-grade deposited weld metals

X.Y. Cao [a], P. Zhu [b], Q. Yong [a], T.G. Liu [a], Y.H. Lu [a, *], J.C. Zhao [b], Y. Jiang [c], T. Shoji [a, d]

[a] National Center for Materials Service Safety, University of Science and Technology Beijing, Beijing 100083, China
[b] Suzhou Nuclear Power Research Institute, Suzhou 215004, China
[c] Atlantic China Welding Consumables, Inc., Zigong 643010, China
[d] Fracture and Reliability Research Institute, Tohoku University, 6-6-01 Aoba AramakiAobaku, Sendai 980-8579, Japan

HIGHLIGHTS

- Low cycle fatigue behavior at 350 °C of tempered deposited weld metal was studied.
- Deposited metal tempered for 1 h exhibited cyclic hardening during fatigue test.
- Tempering for 24 h resulted in cyclic softening at high strain amplitude.
- M-A islands and dislocations activities resulted in fatigue property variation.

ARTICLE INFO

Article history:
Received 30 September 2017
Received in revised form
20 November 2017
Accepted 3 December 2017

Keywords:
Deposited weld metal
Tempering
High temperature
Low cycle fatigue

ABSTRACT

Effect of tempering on low cycle fatigue (LCF) behaviors of nuclear-grade deposited weld metal was investigated, and The LCF tests were performed at 350 °C with strain amplitudes ranging from 0.2% to 0.6%. The results showed that at a low strain amplitude, deposited weld metal tempered for 1 h had a high fatigue resistance due to high yield strength, while at a high strain amplitude, the one tempered for 24 h had a superior fatigue resistance due to high ductility. Deposited weld metal tempered for 1 h exhibited cyclic hardening at the tested strain amplitudes. Deposited weld metal tempered for 24 h exhibited cyclic hardening at a low strain amplitude but cyclic softening at a high strain amplitude. Existence and decomposition of martensite-austenite (M-A) islands as well as dislocations activities contributed to fatigue property discrepancy among the two tempered deposited weld metal.

1. Introduction

Low carbon and low alloy steels are widely used as the structural materials of pressure vessels and steam generators in nuclear power plants due to its good mechanical properties and low cost [1–3]. Post weld processing, such as tempering treatment, is considered as the important factor to improve the mechanical properties of the weld joints further. However, these low alloy steels during service in high temperature and pressure environment are often subjected to repeated thermal stresses due to the existence of pressure fluctuations and external loads, as well as temperature gradients on heating and cooling during service process [4,5], which may result in low cycle fatigue (LCF) damage. Therefore, high fatigue resistance at high temperature is a necessary requirement for the low carbon and low alloy weld metals used in nuclear power plants.

The LCF resistance of materials depends on the initial microstructure and the strain amplitude of fatigue [6–8]. The total strain amplitude of fatigue is composed of plastic strain and elastic strain. In general, at high strain amplitude, the plastic strain amplitude plays a dominant role in the fatigue resistance, and higher ductility contributes to higher fatigue resistance. In contrast, at low strain amplitude, the elastic strain amplitude controls the fatigue resistance, and higher strength would result in higher fatigue resistance [9–11]. In addition, the cyclic stress response during fatigue tests is also controlled by the microstructure and strain amplitude of the fatigue. The ferrite-based steels may perform cyclic softening or cyclic hardening depending on the strain amplitude [12], but cyclic hardening would occur for ferrite-martensite based steels [13,14], and cyclic softening for austenite-based stainless steels [15]. The

* Corresponding author.
E-mail address: lu_yonghao@mater.ustb.edu.cn (Y.H. Lu).

https://doi.org/10.1016/j.jnucmat.2017.12.002
0022-3115/

movement and interaction of dislocations during fatigue process plays an important role in the cyclic deformation [16–23]. However, most published works on fatigue are carried out at room temperature and investigation concentrating on the high temperature fatigue resistance is insufficient, as well as the corresponding microstructural variation during fatigue process is not clarified. Therefore, it is very important to understand the fatigue resistance and cyclic deformation behavior of the low-alloyed deposited metals at high temperature.

The present paper focuses on the microstructure evolution of deposited weld metal of low carbon and alloy steel during tempering process and its effects on the high temperature fatigue properties. A new developed welding rod was used to produce welded joints of the low alloy steels of nuclear pressure vessel, and post-weld tempering was carried out to improve the fatigue resistance of the welded metals. The high temperature low cycle fatigue behavior of the deposited weld metals after tempering for different times was studied. Microstructure evolution during fatigue tests was investigated to understand the tempering effects on the fatigue resistance of the deposited weld metals.

2. Material and experimental procedures

2.1. Materials and welding parameters

A welding rod, named as E9018-G, was used in this work. The welding rod was developed by Atlantic China Welding Consumables, Inc. for nuclear grade low carbon and low alloy steels. Single V-groove and bead-weld weldments were prepared by manual arc welding using the welding rods with welding voltage about 24 V and current about 160 A respectively. Chemical composition of the deposited weld metal was listed in Table 1.

After welding, post-weld tempering at 650 °C was performed. The deposited metals were firstly heated up to 615 °C at a rate of 55 °C/h, and then held at the temperature for 1 h and 24 h, respectively. Subsequently, they were cooled to 300 °C in furnace and followed by air cooling. After that, these as-prepared metals were tested for high temperature tensile properties and low cycle fatigue behaviors.

2.2. Tension test

Fig. 1 shows the schematic diagram of deposited weld metal and tensile specimen. Round specimens for tension test with a diameter of 10 mm and gauge length of 50 mm were machined from the deposited weld metal in single V-groove weldments. The axial direction of specimens paralleled to the welding direction. The tension tests were carried out at 350 °C using an Instron testing machine with a constant extension rate of 1 mm/min.

2.3. Low cycle fatigue test

Standard round specimen for fatigue test was used in this work, as shown in Fig. 2. Several samples were machined from the mid-thickness layer of bead-weld weldments with the long axis paralleling to the welding direction. LCF tests were carried out at 350 °C under an axial strain control mode with the total strain amplitude, $\Delta\varepsilon t/2$, ranging from 0.2% to 0.6%. The strain ratio (minimum to maximum, $R\varepsilon$) was −1 in all tests. The fatigue life, Nf, of a sample was defined as the number of cycles at which the sample fractured. The fatigue parameters were extracted from the mid-life hysteresis loops and were used to evaluate the relationships between the cyclic variables of strain and the fatigue life based on the Manson-Coffin equation. The plastic strain range, $\Delta\varepsilon p$, and elastic strain range, $\Delta\varepsilon e$, were calculated from the hysteresis loops under the assumption that the elastic modulus, E, is a constant during the total LCF test.

Optical microscope (OM), scanning electron microscope (SEM) and transmission electron microscope (TEM) were used to map the microstructures of the as-prepared deposited weld metals and the samples after low cycle fatigue tests. The fracture morphologies after fatigue test were observed as well. The samples for microstructure observation have a dimension of 15 mm × 10 mm × 3 mm, which were cut from the mid-thickness layer of the bead-weld weldments before LCF test. The samples were firstly ground using silicon carbide papers and polished using synthetic diamond lapping paste. After that, these samples were etched in 4% nital. After LCF test, the cross-section samples, parallel to the loading direction and located at 10 mm away from the fatigue fracture surface, were used to examine the microstructural evolution of the deposited metal during LCF test. The samples were prepared as described above. Subsequently, the microstructures

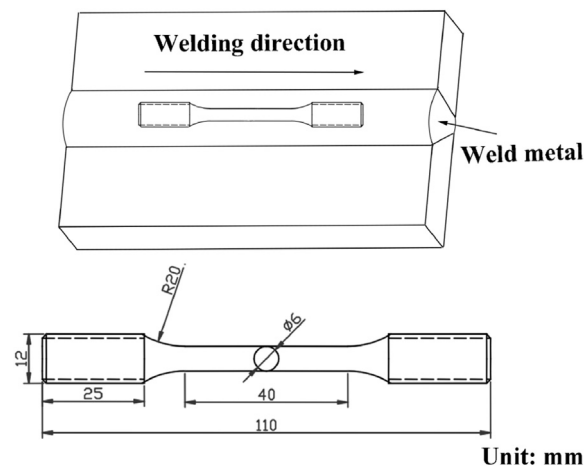

Fig. 1. Schematic diagram of deposited weld metal and tensile specimen.

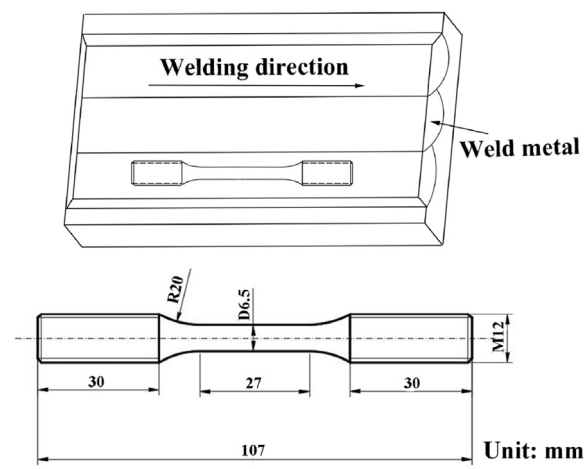

Fig. 2. Schematic diagram of deposited weld metal and fatigue specimen.

Table 1
Chemical composition of the deposited weld metal (wt. %).

C	Mn	Ni	Mo	Cr	Si	Cu	V	P	S	Fe
0.073	1.46	1.05	0.51	0.044	0.24	0.022	0.007	0.009	0.004	Bal.