Thin Solid Films 603 (2016) 180–186

Contents lists available at ScienceDirect

Thin Solid Films

journal homepage: www.elsevier.com/locate/tsf

Color change mechanism of niobium oxide thin film with incidental light angle and applied voltage

Isao Komatsu [a,*], Hayata Aoki [b], Mizue Ebisawa [d], Akihiro Kuroda [c,e], Koichi Kuroda [e], Shuichi Maeda [a,b,c]

[a] Course of Information Science and Technology, Graduate School of Science and Technology, Tokai University, Japan
[b] Course of Electro Photo Optics, Graduate School of Engineering, Tokai University, Japan
[c] Department of Optical and Imaging Science & Technology, Faculty of Engineering, Tokai University, Japan
[d] Tokyo Metropolitan Industrial Technology Research Institute, Japan
[e] Kuroda Consulting Incorporated, Japan

ARTICLE INFO

Article history:
Received 15 June 2015
Received in revised form 22 January 2016
Accepted 6 February 2016
Available online 9 February 2016

Keywords:
Niobium
Anodization
Thin film interference
Coloration

ABSTRACT

Niobium oxide thin layers made by the anodization process showed coloration owing to thin film interference. The *reflection* spectra depended on both the applied voltage and incident light angle. Large color differences were observed at incident light angles between 5° and 70°, when the applied voltage was over 60 V. In this study, we explored the cause of these results using ellipsometry and goniophotometry to understand the transition of optical constants and the *reflection* spectra with applied voltage. Finally, we concluded that the coloration of the *reflection* spectra, which included only a first-order interference peak, exhibits a smaller change because the first order interference peak has a wider half value width than higher order interference peaks.

1. Introduction

It is well-known that several metal films, including titanium, cobalt, zirconium, tantalum and niobium [1–7] exhibit various colors because of thin film interference of passive layers. Niobium oxide (Nb_2O_5) films have been prepared by a variety of chemical and physical deposition processes [8–12]. Anodization is a simple method for making Nb_2O_5 films on niobium (Nb). Nb_2O_5 films which have high refractive index and superior chemical and thermal stability are expected as the material for the electronic paper [13–15].

The *reflection* spectra of the thin films depend on both the applied voltage and incident light angle. Thin film interference is the phenomenon that occurs when incident light waves reflected by the upper and lower boundaries of a thin film interfere with one another to form a new wave as shown in Fig. 1. The interference is constructive when the optical path difference is equal to an integer multiple of the wavelength of light. In Fig. 1, d is the thickness of Nb_2O_5, θ_1 is the incident light angle of Nb_2O_5, θ_2 is the angle of refraction of the light on the boundary between the Nb_2O_5 and Nb layers. The relationship between θ_1 and θ_2 and refractive index of Nb_2O_5 is determined by Snell's Law. These conditions suggest that the color of the film is strongly dependent on the thickness of the Nb_2O_5 layer and incident angle.

From an industrial application viewpoint, understanding the coloration mechanism of Nb_2O_5 is necessary for its use as a decorative material because color changes may lower product quality. In this study, we therefore explored the occurrence of Nb_2O_5 coloration using ellipsometry and goniophotometry in order to understand the transition of optical constants and the *reflection* spectra with incident angle and applied voltage.

2. Material and methods

2.1. Sample preparation of Nb_2O_5 with anodizing process

Typical procedures for coloring Nb films by anodization were carried out as follows: a Nb film (0.1 mm thickness, 99.9%, Nilaco Co., Ltd., Tokyo, Japan) cut to ca. 25 mm × 25 mm was used as an anode electrode with an alligator clip and dipped about 20 mm into 100 ml of a 5.0 *w/v*% citric acid solution as shown in Fig. 2 to keep the alligator clip from the liquid. The sample surface was cleaned with ultrasonic rinse with ethanol for 1 min before put into the liquid. A platinum (Pt) plate was used as the cathode and an electric voltage of 10 V was applied for 5 min. Anodization current was monitored by a digital ammeter. An oxide layer was formed on the surface of the Nb anode and the color change was observed. The procedure was repeated at supplied voltages ranging from 10 to 100 V at 10 V intervals. The colors of the sample surfaces are shown in Fig. 3.

* Corresponding author at: 4-1-1 Kitakaname, Hiratsuka-shi, Kanagawa 259-1292, Japan.

http://dx.doi.org/10.1016/j.tsf.2016.02.011
0040-6090/

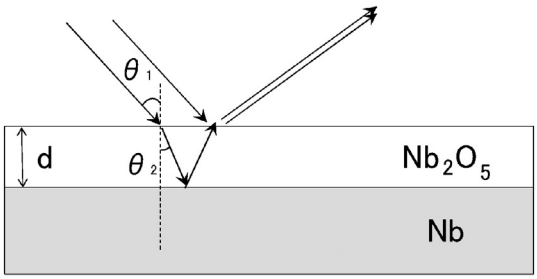

Fig. 1. Schematic diagram showing thin film interference between Nb_2O_5 and Nb layer.

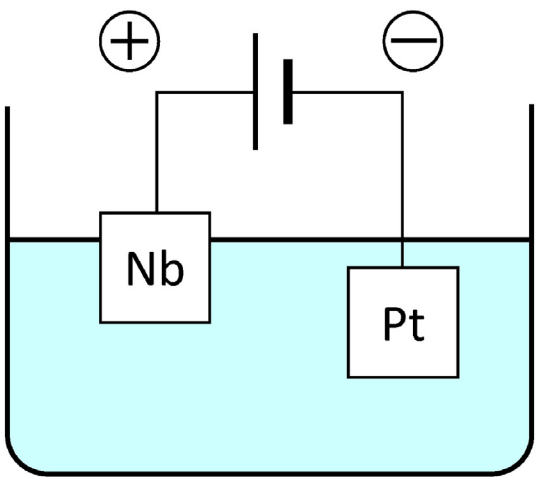

Fig. 2. Schematic diagram showing the coloration of Nb films by anodization in 100 ml of a 5.0 *w/v%* citric acid solution.

2.2. Ellipsometry

Ellipsometry can determine the thickness, refractive index (n) and extinction coefficient (k) of a film. An M-2000 V-Te spectroscopic ellipsometer (J.A. Woollam Co., Inc., Lincoln, NE, USA) was used to measure the film thickness, n, and k of Nb_2O_5 films at room temperature from 370 to 1000 nm. These properties were dependent on the wavelength and fitting model, and were used to examine the transition of optical constants.

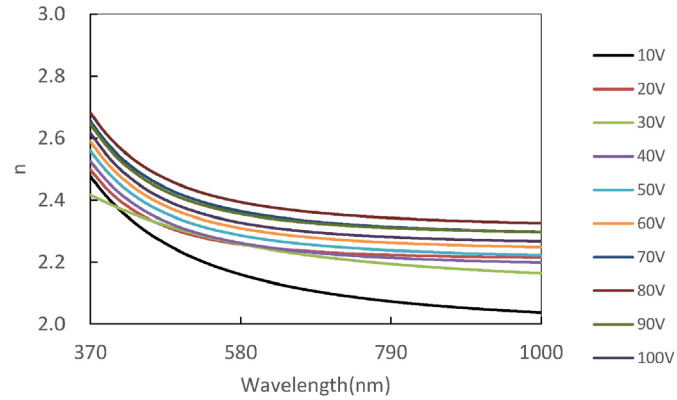

Fig. 4. Refractive index (n) dependency with wavelength for Nb_2O_5.

Bulk(Nb) and one thin layer model were adopted for the thickness analysis with ellipsometry. Optical constants of base material were obtained from non-processed Nb film analysis. Cauchy dispersion model could be adopted for the optical constant of Nb_2O_5 film which had little absorption in the visible light region [16]. In addition there was a possibility that the density changes during Nb_2O_5 deposition, n was also set as variable when analyzing its thickness.

2.3. Focused ion beam and scanning electron microscopy

The cross-sectional view of a 100 V sample was observed with scanning electron microscopy (SEM) and the thickness of the corresponding Nb_2O_5 film was measured by ellipsometry. The cross-sectional views of samples were obtained using a FB-2000 A (Hitachi Co., Ltd., Tokyo, Japan) focused ion beam (FIB). SEM studies were made using a Hitachi

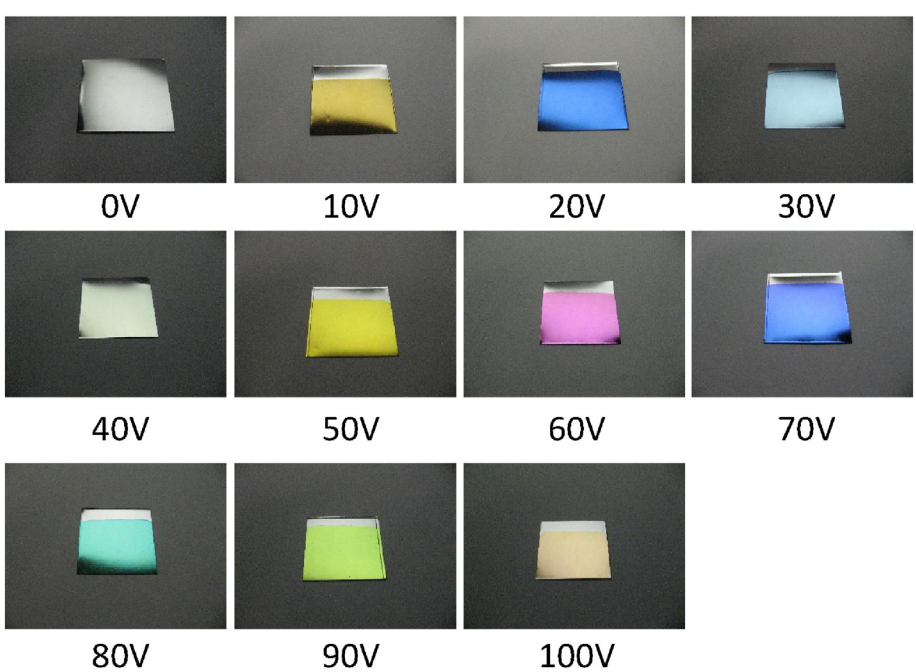

Fig. 3. Photo images of Nb_2O_5 processed at 10–100 V. 0 V refers to an unprocessed sample.