Available online at www.sciencedirect.com

ScienceDirect

Procedia Engineering 146 (2016) 567 – 572

Procedia Engineering

www.elsevier.com/locate/procedia

8th International Cold Climate HVAC 2015 Conference, CCHVAC 2015

Numerical evaluation of the indoor environment in a room with capillary radiation air conditioning system

Linhua Zhang[a,b,*], Dong Yang[a,b], Yan Zhang[b], Qingmei Wen[b], Jiying Liu[a,b]

[a]*Key Laboratory of Renewable Energy Utilization Technologies in Buildings, Ministry of Education, Jinan 250101, China*
[b]*School of Thermal Engineering, Shandong Jianzhu University, Jinan 250101, China*

Abstract

Numerical simulation has been conducted in a conference room with capillary radiation air conditioning system in Jinan. The influence of the different supply air speed on the indoor temperature field, velocity field, air age, PMV and PPD have been studied. It is found that the indoor thermal comfort level is the highest when supply air velocity is in the range of 1.75 to 2 m/s.

© 2016 The Authors. Published by Elsevier Ltd. This is an open access article under the CC BY-NC-ND license (http://creativecommons.org/licenses/by-nc-nd/4.0/).
Peer-review under responsibility of the organizing committee of CCHVAC 2015

Keywords: Capillary radiantion air conditioning system, Thermal comfort, Indoor environment, Numerical evaluation;

1. Introduction

In China the total energy consumption of buildings accounts for 20.7% of final energy community of the society, in which the air conditioning energy consumption accounted for a large share. Capillary radiation air conditioning system get more and more attention with its thermal comfort, energy saving and other characteristics.

The paper adopted the numerical simulation by Computational Fluid Dynamics (CFD) method, which has been done in a room with capillary radiation and displacement ventilation of air conditioning system in Jinan, obtaining operating results of capillary radiation air conditioning system in a cold climate area.

* Corresponding author. Tel.: +86-15098736935; fax: +531-86367629.
E-mail address: zhth0015@sdjzu.edu.cn, jxl83@sdjzu.edu.cn (Jiying Liu)

1877-7058 © 2016 The Authors. Published by Elsevier Ltd. This is an open access article under the CC BY-NC-ND license (http://creativecommons.org/licenses/by-nc-nd/4.0/).
Peer-review under responsibility of the organizing committee of CCHVAC 2015
doi:10.1016/j.proeng.2016.06.403

Nomenclature

CFD	Computational Fluid Dynamics
PMV	Predicted Mean Vote
PPD	Predicted Percentage Dissatisfied

2. Physical Model

2.1. Room geometric model

According to the building size of the room combined with the arrangement of tuyeres in air-conditioning area, establish three-dimensional model, the geometric dimensions is 6m×4m×3m. Tuyere adopted the arrangement of air supply in the upper side and air return in the lower part of the room, delivery outlet and air vents on the east wall all used grille, delivery outlet center is 2.7m height from the ground, return air center is 0.25m height from the ground; There is a rectangular conference table in the middle of the room, 10 participants. Fig. 1 is a schematic view of a physical model room.

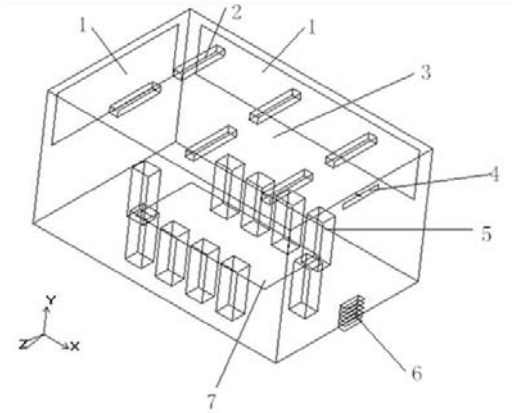

Fig. 1. description of the room model including (1) window, (2) daylight lamp, (3) ceiling radiation panels, (4) delivery outlet, (5) staff model, (6) return air inlet, (7) conference table.

2.2. Simulation setup

Internal heat source are the staff and lighting inside the room. Room design parameters are as follows t_0=25℃, RH=65%. Indoor load is 2835W from the load calculation，capillary radiation system bear the 44% of the load, displacement ventilation system bear the 56% of the load and all wet load. Specific parameters of calculation model are seen in Table 1.

Table 1. Calculation model specific parameter table.

Name	Size (m)	number	remarks
Staff	0.4×0.35×1.1	10	Heat dissipation 75W/p, scattered wet amount 0.014g/s
Daylight lamp	0.2×1.2×0.15	6	Heat dissipation 30W/bowl
Delivery outlet	1×0.13	1	T=21℃, RH=65%
Return air inlet	0.3×0.3	1	
Ceiling radiation panels	6×4	1	Cooling capacity 50W/m^2, temperature 20℃
Northern exterior window	3×2	1	External temperature 35℃
Western exterior window	1.5×2	1	External temperature 35℃

Download English Version:

https://daneshyari.com/en/article/853607

Download Persian Version:

https://daneshyari.com/article/853607

Daneshyari.com