ARTICLE IN PRESS

Journal of the Energy Institute xxx (2017) 1–8

Contents lists available at ScienceDirect

Journal of the Energy Institute

journal homepage: http://www.journals.elsevier.com/journal-of-the-energy-institute

# Technological aspects of sunflower biomass and brown coal co-firing

Marek Kułażyński [a, *], Sławomir Jabłoński [b], Jan Kaczmarczyk [a], Łukasz Świątek [a], Katarzyna Pstrowska [a], Marcin Łukaszewicz [b]

[a] Wroclaw University of Science and Technology, Faculty of Chemistry, Division of Fuel Chemistry and Technology, Gdańska 7/9, 50-344 Wrocław, Poland
[b] University of Wroclaw, Faculty of Biotechnology, F. Joliot-Curie 14a, 50-383 Wrocław, Poland

ARTICLE INFO

*Article history:*
Received 18 April 2017
Received in revised form
5 June 2017
Accepted 6 June 2017
Available online xxx

*Keywords:*
Lignite
Self-ignition
Methanogenesis
Pellets
Husk

ABSTRACT

The technological problems occurring in the co-firing of biomass and brown coal (lignite) prompted this research project. During the fuel preparation, accidental self-ignition and explosions were several times reported by power plants operators. The aim of this study was to evaluate brown coal, sunflower husks and sunflower husk pellets as fuels for co-firing in energetic boilers. Sunflower husk had a lower ash content and calorific value than the pellets. The range of the combustion temperatures of the biomass (200–300 °C) was narrower than that of brown coal (200–800 °C). The formation of highly alkaline ash from the biomass resulted in the formation in boiler of agglomerates of ash. The elemental composition, thermogravimetric and biological analyses suggested that the pellets contained synthetic additives difficult to identify. The biological method was proposed for evaluating biomass additives. The use of additional agents in the pelletizing process may influence on the combustion parameters. Mixing biomass with brown coal may occasionally result in self-ignition in the logistic chain. Plastic additives and biological activity may contribute to self-ignition.

© 2017 Energy Institute. Published by Elsevier Ltd. All rights reserved.

## 1. Introduction

Owing to the large coal deposits, the combustion of lignite and hard coal are the main primary energy sources used for electricity and heat production in Poland [1]. Compliance with the EU climate policy requires a replacement of high $CO_2$ emission factor fuels with more environmentally friendly renewable energy sources. Availability of farmlands in Poland, results in a great interest in the use of biomass as a renewable and environmentally friendly source of energy. Biomass energy accounted for 80% of all renewable energy types used in Poland in 2013.

For co-firing biomass is added either in the crushed form e.g., wood chips or in the processed form into pellets or briquettes. In the case of pelletized biomass, different additives are added to improve the slip and calorific value, such as adhesive agents [2]. We have observed over several years an increase in the calorific value of the biomass supplied to the power plants. Similarly, a high calorific value of the pellets from sunflower husk was published (20.79 MJ/kg) [3] in contrast to unprocessed husk (16.6–18.5 MJ/kg) [4–7]. Lignocellulose content may have an effect on the calorific value, but the impact of additives introduced during the pelletization process may also be significant. This suggests adding high energy components at the stage of pellet formation.

The most common types of boilers used by power plants in Poland are pulverized fuel boilers (PFB). Co-combustion is technically and economically simple way to use biofuels in PFB [1]. Co-firing process allows biomass-to-energy conversion with the use of existing infrastructure for energy production and transformation. Reversibility of the biomass and the closeness of $CO_2$ cycle in case of fuel combustion do not have a negative climate impact. Production of perennial energy crops leads additionally to rural development and social changes. In the case of combustion processes, a partial replacement of coal with biomass also reduces the emission of sulfur dioxide ($SO_2$) responsible for a negative effect on health and environment by aerosols formation, acidification of soils and forests, and corrosion of materials and buildings. Thus, particularly favorable is the use of biomass in small heating plants, which are not equipped with systems for flue gas desulfurization.

* Corresponding author. Wroclaw University of Science and Technology, Faculty of Chemistry, Division of Fuel Chemistry and Technology, Gdańska 7/9, 50-344 Wrocław, Poland.

*E-mail addresses:* marek.kulazynski@pwr.edu.pl (M. Kułażyński), slawomir.jablonski@uni.wroc.pl (S. Jabłoński), jan.kaczmarczyk@pwr.edu.pl (J. Kaczmarczyk), lukasz.swiatek@pwr.edu.pl (Ł. Świątek), katarzyna.pstrowska@pwr.edu.pl (K. Pstrowska), marcin.lukaszewicz@uwr.edu.pl (M. Łukaszewicz).

http://dx.doi.org/10.1016/j.joei.2017.06.003
1743-9671/© 2017 Energy Institute. Published by Elsevier Ltd. All rights reserved.

Please cite this article in press as: M. Kułażyński, et al., Technological aspects of sunflower biomass and brown coal co-firing, Journal of the Energy Institute (2017), http://dx.doi.org/10.1016/j.joei.2017.06.003

ARTICLE IN PRESS



Sunflower husk pellets are one of the most common forms of biomass used for the co-firing in coal-fired power plants. Sunflower husks, in respect to other biomass sources, are of high calorific value and resistance to biodegradation that results from high lignin content [8]. On the other hand, some properties of sunflower husks cause technical problems in co-combustion with coal, especially a high amount of potassium, which is considered as the main ingredient causing slagging and fouling in the boiler chambers [4,9].

The technological problems in the co-firing of biomass and brown coal (lignite) prompted this research project. Standard fuel analyses provide insufficient information about the biomass used as a fuel in co-firing process [10]. The composition of additives used in the pelletization process is not well described. The industrial pellet producers use the additives based on wastes, making the pellets cheaper. The commonly used analyses [11–14] cannot determine the chemical nature of additives, for example, a possible presence of plastics [15]. The chemical composition alone is not enough to determine a susceptibility of biomass to degradation and an appearance of the electrostatic charges due to friction occurring during the transport. A solution to this problem could be the use of biological methods, such as the methanogenic potential combined with the models describing the biodegradation process [16,17]. During the fuel preparation, accidental self-ignition and explosions were reported several times by power plants operators. Since such problem was observed only for biomass pellet but not for unprocessed biomass, it could be assumed that additives are sources of the safety issues. Pellet biomass properties and/or chemical composition seem to promote such accidents. To determine the cause of these problems, the following analyses were performed:

- proximate analysis of brown coal, sunflower husk and sunflower pellets (raw materials);
- chemical composition of the raw materials and ashes formed in the firing process;
- thermogravimetric analysis of brown coal, sunflower husk, sunflower pellets in argon and air atmosphere;
- anaerobic biodegradability tests of sunflower husk and sunflower pellets.

## 2. Experimental

### 2.1. Materials

Three different energetic materials, provided by the Turów power plant (Poland) were used in this study: sunflower husks, sunflower husk pellets and brown coal. All of the materials were supplied in the operating state. The samples were air-dried and ground to a grain size < 0.2 mm.

### 2.2. Proximate analysis

The following analyses of the raw materials were carried out according to the suitable standards:

- Moisture content according to ASTM D3173–11,
- Ash content according to ASTM D3174–12,
- Volatile matter content according to ASTM D3175 – 11,
- Calorific value was determined according to ASTM D5865 – 13.

The chemical composition of the raw materials and ashes obtained in the co-firing process was determined using an ICP–AES Liberty 220 atomic emission spectrometer (Varian). Elemental composition was determined CHNS EA 1110 analyser (CE Instruments).

### 2.3. Thermogravimetric studies

Thermal gravimetric analyses of brown coal, sunflower husks and sunflower husk pellets were performed using the thermogravimetric apparatus shown in Fig. 1. The apparatus consists of a tubular resistance furnace (1) with the quartz tube (2) positioned coaxially. The furnace is powered from the AC mains by a programmable temperature controller (3). 1 g of the tested sample was placed in a measuring cell

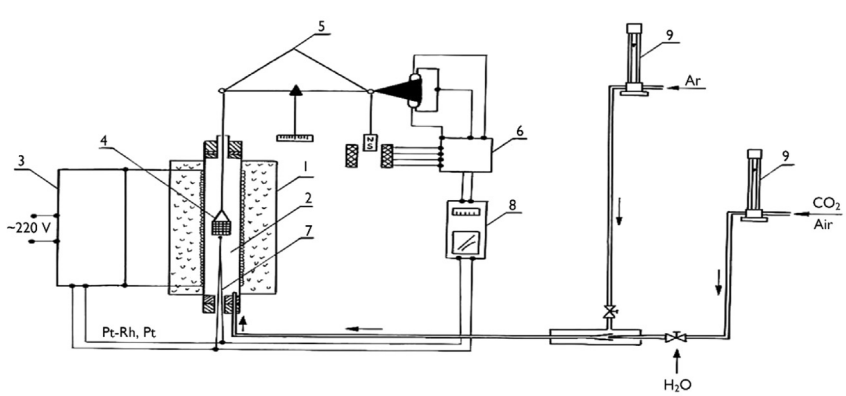


**Fig. 1.** The thermogravimetric apparatus (TG) scheme. (1) tubular resistance furnace, (2) quartz tube, (3) programmable temperature controller, (4) measuring cell, (5) analytical balance, (6) electronic photoelectric-electromagnetic starter, (7) thermocouple, (8) multi-electronic compensator, (9) rotameter.

Please cite this article in press as: M. Kułażyński, et al., Technological aspects of sunflower biomass and brown coal co-firing, Journal of the Energy Institute (2017), http://dx.doi.org/10.1016/j.joei.2017.06.003

Download English Version:

https://daneshyari.com/en/article/8955755

Download Persian Version:

https://daneshyari.com/article/8955755

Daneshyari.com